Aydosa®

sinds 1968

Afsteken / steekdraaien 2017

The qualifications of AYDOSA Grooving and Parting toolholders
Die Qualifikationen der AYDOSA Stechdrehwerkzeuge und Stechklingen

Grooving toolholder - Stech Drehwerkzeuge

1. 44 HRc hardened Tool Holders
1. 44 HRc verhärtete Werkzeughalter

2. Smooth surfaces manufactured after heat treatment
2. Einwandfreie Oberflächen werden nach der Hitzebehandlung bearbeitet

3. To obtain precise and accurate measurements the insert pockets are machined after the heat treatment
3. Um präzise und genaue Maße zu erringen werden die Plattensitze nach der Hitzebehandlung bearbeitet

4. According to your inserts improved contact surfaces of insert pockets
4. Entsprechend Ihrer Wendeplatten verbesserte Kontakflächen der Wendeplattensitze

5. High valued material tensile strentgh
5. Hochwertige Materialzugfestigkeit

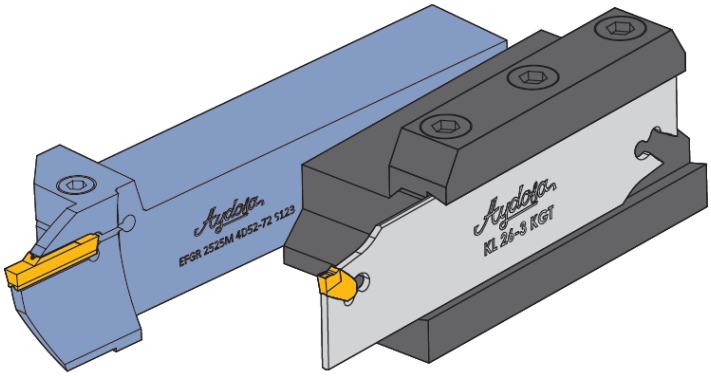

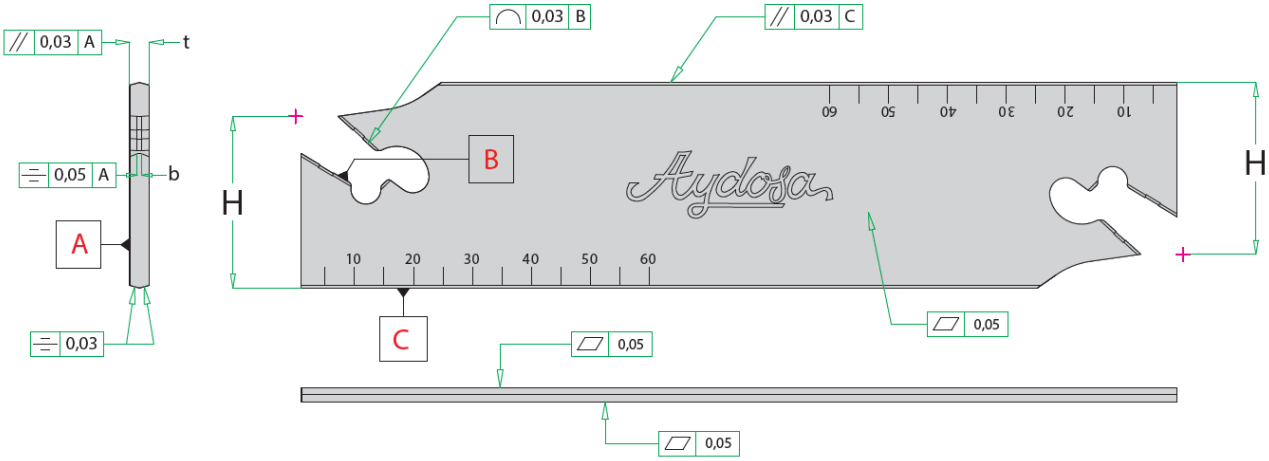

Parting blades

1. 55 HRc Hardened parting blades

2. Smooth surfaces manufactured after heat treatment

3. After heat treatment machined precise and accurate measurements insert pockets

4. According to your inserts improved contact surfaces of insert pockets

5. The parallelism value on length 150 mm is between ±0,03 mm

6. The flatness value on 150 mm is max. 0,05 mm

7. The narrow tolerance measurement values of insert center height are ±0.05 mm

8. The remaining symmetry on the surface of the angle-edged parting blades are 0.03 mm

9. High valued material tensile strentgh

Stechklingen

1. 55 Hrc verhärtete Stechklingen

2. Nach der Hitzebehandlung bearbeitete einwandfreie Oberflächen

3. Präzise und genaue Maße der Plattensitze werden nach der Hitzebehandlung bearbeitet

4. Entsprechend Ihrer Wendeplatten verbesserte Kontakflächen der Wendeplattensitze

5. Die Parallelität zwischen den Werten in der Länge von 150 mm ist 0,03 mm

6. Die Flächenebene bei 150 mm Länge ist max. 0,05 mm

7. Engtoleranz Messwerte von der Spitzenhöhe der Wendeplatte sind ±0,05 mm

8. Die Verbleibende Symmetrie auf der Oberfläche der Winkelkantigen Stecklingen sind 0,03 mm

9. Hochwertige Materialzugfestigkeit

AGHGR

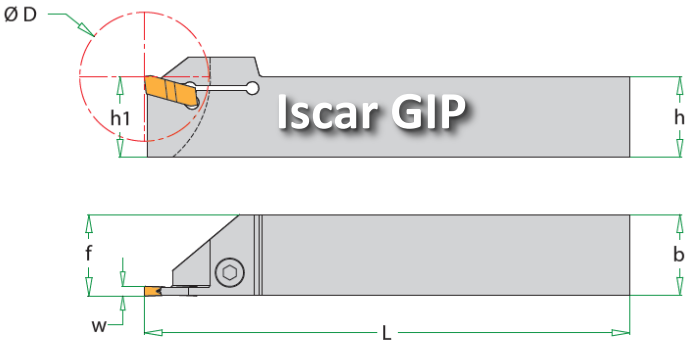

Code No	h	b	L	h1	f	w	Ø D	T	Inserts Platten	Screw Schraube	Tightening Torque Anzugsmoment
AGHGR 2020K 2D35	20	20	125	20	20.4	2	35	-	GIP - 2	M5x0.8-25 mm	max. 3,5 Nm
AGHGR 2525M 2D35	25	25	150	25	25.4	2	35	-	GIP - 2	M5x0.8-25 mm	max. 3,5 Nm
AGHGR 2020K 3D40	20	20	125	20	20.25	3	40	-	GIP - 3	M5x0.8-25 mm	max. 5,5 Nm
AGHGR 2525M 3D40	25	25	150	25	25.25	3	40	-	GIP - 3	M5x0.8-25 mm	max. 5,5 Nm

ADGR

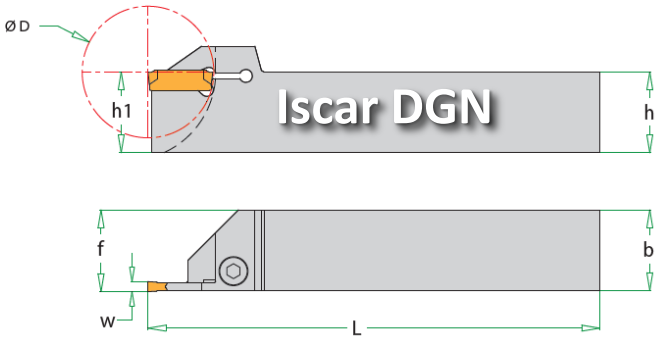

Code No	h	b	L	h1	f	w	Ø D	T	Inserts Platten	Screw Schraube	Tightening Torque Anzugsmoment
ADGR-L 1212 2D32	12	12	140	12	12.2	2	32	-	DGN - 2	M5x0.8-16 mm	max. 3,5 Nm
ADGR-L 1616 2D32	16	16	140	16	16.2	2	32	-	DGN - 2	M5x0.8-16 mm	max. 3,5 Nm
ADGR-L 2020 2D35	20	20	140	20	20.2	2	35	-	DGN - 2	M5x0.8-25 mm	max. 3,5 Nm
ADGR-L 2525 2D35	25	25	140	25	25.2	2	35	-	DGN - 2	M5x0.8-25 mm	max. 3,5 Nm
ADGR-L 1212 3D35	12	12	140	12	12.35	3	35	-	DGN - 3	M5x0.8-16 mm	max. 5,5 Nm
ADGR-L 1616 3D35	16	16	140	16	16.35	3	35	-	DGN - 3	M5x0.8-16 mm	max. 5,5 Nm
ADGR-L 2020 3D40	20	20	140	20	20.35	3	40	-	DGN - 3	M5x0.8-25 mm	max. 5,5 Nm
ADGR-L 2525 3D40	25	25	140	25	25.35	3	40	-	DGN - 3	M5x0.8-25 mm	max. 5,5 Nm

EGPR-S123

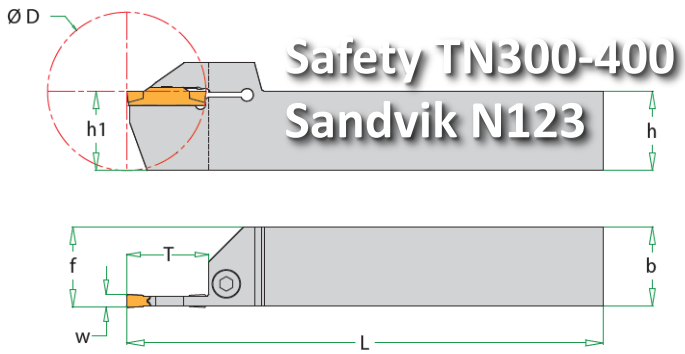

Code No	h	b	L	h1	f	w	Ø D	T	Inserts Platten	Screw Schraube	Tightening Torque Anzugsmoment
EGPR-L 2020K 2D40- S123	20	20	125	20	20.25	2	40	20.5	S123 - 2	M5x0.8-25 mm	max. 3,5 Nm
EGPR-L 2525M 2D40- S123	25	25	150	25	25.25	2	40	20.5	S123 - 2	M5x0.8-25 mm	max. 3,5 Nm
EGPR-L 2020K 3D40- S123	20	20	125	20	20.4	3	40	20.5	S123 - 3	M5x0.8-25 mm	max. 5,5 Nm
EGPR-L 2525M 3D40- S123	25	25	150	25	25.4	3	40	20.5	S123 - 3	M5x0.8-25 mm	max. 5,5 Nm
EGPR-L 2020K 4D50- S123	20	20	125	20	20.45	4	50	26	S123 - 4	M5x0.8-25 mm	max. 5,5 Nm
EGPR-L 2525M 4D50- S123	25	25	150	25	25.45	4	50	26	S123 - 4	M5x0.8-25 mm	max. 5,5 Nm
EGPR-L 2020K 5D64- S123	20	20	125	20	20.45	5	64	32.5	S123 - 5	M5x0.8-25 mm	max. 5,5 Nm
EGPR-L 2525M 5D64- S123	25	25	150	25	25.45	5	64	32.5	S123 - 5	M5x0.8-25 mm	max. 5,5 Nm

EGPR-S151

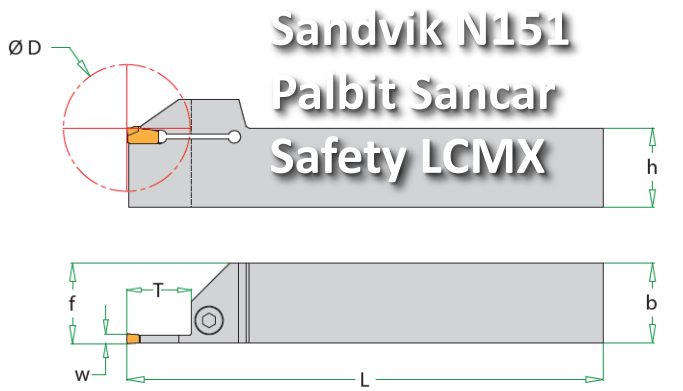

Code No	h	b	L	h1	f	w	Ø D	T	Inserts Platten	Screw Schraube	Tightening Torque Anzugsmoment
EGPR-L 1616H 3D20-S151	16	16	100	16	16.3	3	20	11.5	N151.2.300	M4x0.7-20 mm	max. 3,5 Nm
EGPR-L 2020K 3D20-S151	20	20	125	20	20.3	3	20	11.5	N151.2.300	M4x0.7-20 mm	max. 3,5 Nm
EGPR-L 2020K 3D40-S151	20	20	125	20	20.3	3	40	20.5	N151.2.300	M5x0.8-25 mm	max. 5,5 Nm
EGPR-L 2525M 3D40-S151	25	25	150	25	25.3	3	40	20.5	N151.2.300	M5x0.8-25 mm	max. 5,5 Nm
EGPR-L 2020K 4D50-S151	20	20	125	20	20.3	4	50	25.5	N151.2.400	M5x0.8-25 mm	max. 5,5 Nm
EGPR-L 2525M 4D50-S151	25	25	150	25	25.3	4	50	25.5	N151.2.400	M5x0.8-25 mm	max. 5,5 Nm

EGPR-M

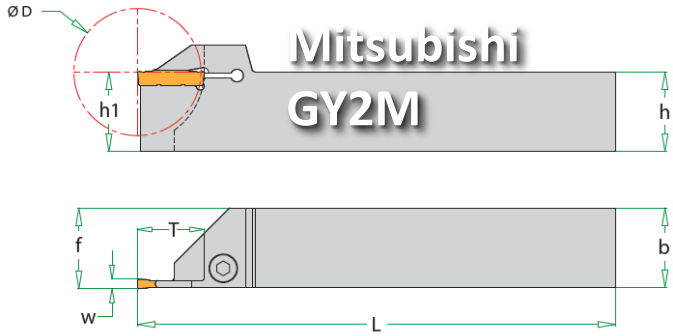

Code No	h	b	L	h1	f	w	Ø D	T	Inserts Platten	Screw Schraube	Tightening Torque Anzugsmoment
EGPR-L 1212K 2D35-M	12	12	125	12	12.2	2	35	-	G - 2	M5x0.8-16 mm	max. 3,5 Nm
EGPR-L 1616K 2D35-M	16	16	125	16	16.2	2	35	-	G - 2	M5x0.8-16 mm	max. 3,5 Nm
EGPR-L 2020K 2D35-M	20	20	125	20	20.2	2	35	-	G - 2	M5x0.8-25 mm	max. 3,5 Nm
EGPR-L 2525M 2D35-M	25	25	150	25	25.2	2	35	-	G - 2	M5x0.8-25 mm	max. 3,5 Nm
EGPR-L 1212K 3D40-M	12	12	125	12	12.4	3	40	-	G - 3	M5x0.8-16 mm	max. 5,5 Nm
EGPR-L 1616K 3D40-M	16	16	125	16	16.4	3	40	-	G - 3	M5x0.8-16 mm	max. 5,5 Nm
EGPR-L 2020K 3D40-M	20	20	125	20	20.4	3	40	-	G - 3	M5x0.8-25 mm	max. 5,5 Nm
EGPR-L 2525M 3D40-M	25	25	150	25	25.4	3	40	-	G - 3	M5x0.8-25 mm	max. 5,5 Nm
EGPR-L 2020K 4D50-M	20	20	125	20	20.4	4	50	25.5	G - 4	M5x0.8-25 mm	max. 5,5 Nm
EGPR-L 2525M 4D50-M	25	25	150	25	25.4	4	50	25.5	G - 4	M5x0.8-25 mm	max. 5,5 Nm

EGPR-HS

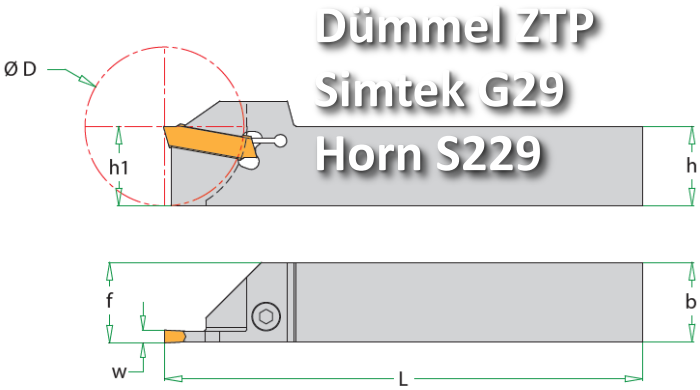

Code No	h	b	L	h1	f	w	Ø D	T	Inserts Platten	Screw Schraube	Tightening Torque Anzugsmoment
EGPR-L 2020M 2D40-HS	20	20	150	20	20.15	2	40	-	29 - 2	M5x0.8-25 mm	max. 3,5 Nm
EGPR-L 2525M 2D40-HS	25	25	150	25	25.15	2	40	-	29 - 2	M5x0.8-25 mm	max. 3,5 Nm
EGPR-L 2020M 3D50-HS	20	20	150	20	20.25	3	50	-	29 - 3	M5x0.8-25 mm	max. 5,5 Nm
EGPR-L 2525M 3D50-HS	25	25	150	25	25.25	3	50	-	29 - 3	M5x0.8-25 mm	max. 5,5 Nm
EGPR-L 2020M 4D50-HS	20	20	150	20	20.35	4	50	-	29 - 4	M5x0.8-25 mm	max. 5,5 Nm
EGPR-L 2525M 4D50-HS	25	25	150	25	25.35	4	50	-	29 - 4	M5x0.8-25 mm	max. 5,5 Nm

EGPR-WT

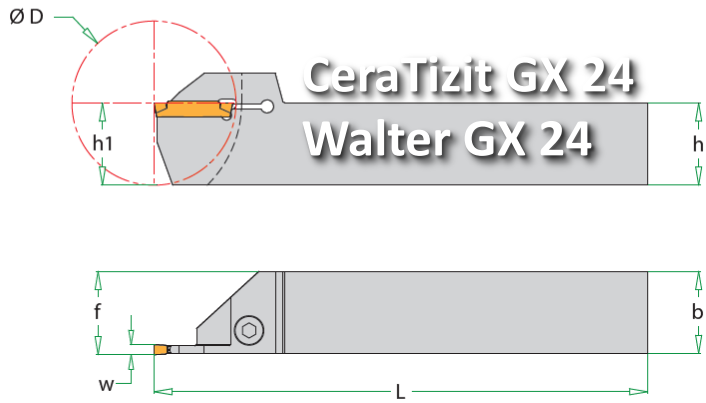

Code No	h	b	L	h1	f	w	Ø D	T	Inserts Platten	Screw Schraube	Tightening Torque Anzugsmoment
EGPR-L 2020K 3D45-WT	20	20	125	20	20.4	3	45	-	GX24-3	M5x0.8-25 mm	max. 5,5 Nm
EGPR-L 2525M 3D45-WT	25	25	150	25	25.4	3	45	-	GX24-3	M5x0.8-25 mm	max. 5,5 Nm
EGPR-L 2020K 4D45-WT	20	20	125	20	20.4	4	45	-	GX24-4	M5x0.8-25 mm	max. 5,5 Nm
EGPR-L 2525M 4D45-WT	25	25	150	25	25.4	4	45	-	GX24-4	M5x0.8-25 mm	max. 5,5 Nm
EGPR-L 2020K 5D45-WT	20	20	125	20	20.5	5	45	-	GX24-5	M5x0.8-25 mm	max. 5,5 Nm
EGPR-L 2525M 5D45-WT	25	25	150	25	25.5	5	45	-	GX24-5	M5x0.8-25 mm	max. 5,5 Nm

EGPR-GX16

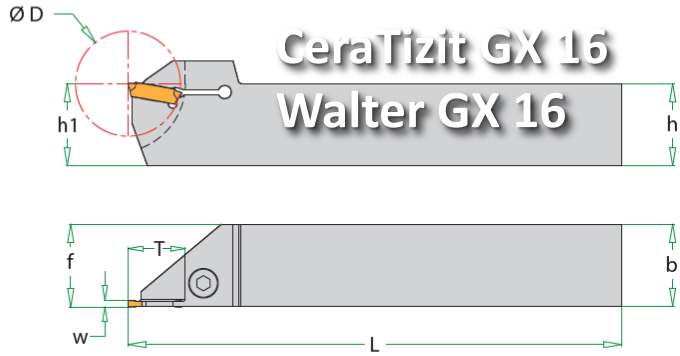

Code No	h	b	L	h1	f	w	Ø D	T	Inserts Platten	Screw Schraube	Tightening Torque Anzugsmoment
EGPR-L 1616K 2D32-GX16	16	16	125	16	16.3	2	32	-	GX16-2	M5x0.8-25 mm	max. 3,5 Nm
EGPR-L 2020K 2D32-GX16	20	20	125	20	20.3	2	32	-	GX16-2	M5x0.8-25 mm	max. 3,5 Nm
EGPR-L 2525M 2D32-GX16	25	25	150	25	25.3	2	32	-	GX16-2	M5x0.8-25 mm	max. 3,5 Nm

EGPR-T3

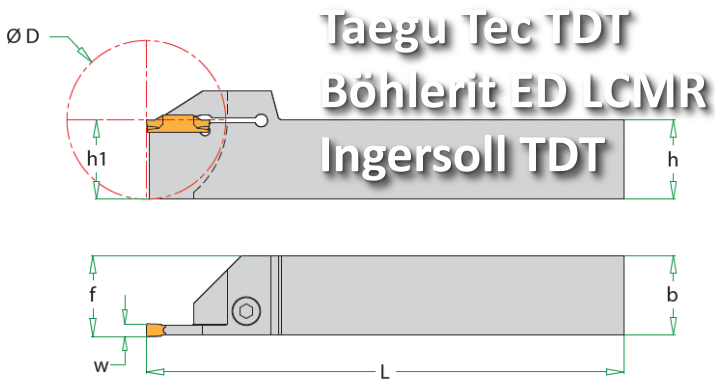

Code No	h	b	L	h1	f	w	Ø D	T	Inserts Platten	Screw Schraube	Tightening Torque Anzugsmoment
EGPR-L 1616K 2D35-T3	16	16	125	16	16.2	2	35	-	T3 - 2	M5x0.8-25 mm	max. 3,5 Nm
EGPR-L 2020K 2D35-T3	20	20	125	20	20.2	2	35	-	T3 - 2	M5x0.8-25 mm	max. 3,5 Nm
EGPR-L 2525M 2D35-T3	25	25	150	25	25.2	2	35	-	T3 - 2	M5x0.8-25 mm	max. 3,5 Nm
EGPR-L 1616K 3D40-T3	16	16	125	16	16.35	3	40	-	T3 - 3	M5x0.8-25 mm	max. 5,5 Nm
EGPR-L 2020K 3D40-T3	20	20	125	20	20.35	3	40	-	T3 - 3	M5x0.8-25 mm	max. 5,5 Nm
EGPR-L 2525M 3D40-T3	25	25	150	25	25.35	3	40	-	T3 - 3	M5x0.8-25 mm	max. 5,5 Nm
EGPR-L 2020K 4D50-T3	20	20	125	20	20.5	4	50	-	T3 - 4	M5x0.8-25 mm	max. 5,5 Nm
EGPR-L 2525M 4D50-T3	25	25	150	25	25.5	4	50	-	T3 - 4	M5x0.8-25 mm	max. 5,5 Nm

AKGMR

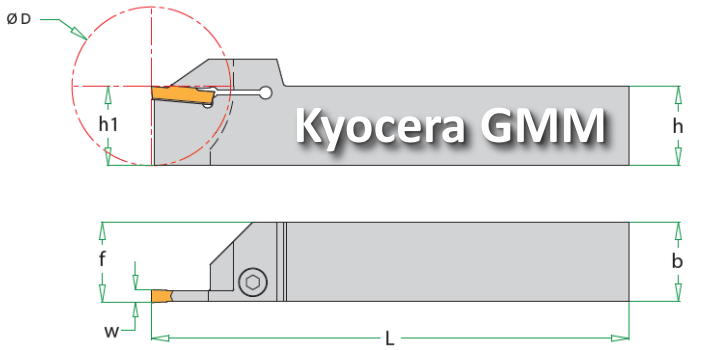

Code No	h	b	L	h1	f	w	Ø D	T	Inserts Platten	Screw Schraube	Tightening Torque Anzugsmoment
AKGMR-L 2020K 2D35	20	20	125	20	20.2	2	35	-	GM - 2	M5x0.8-25 mm	max. 3,5 Nm
AKGMR-L 2525M 2D35	25	25	150	25	25.2	2	35	-	GM - 2	M5x0.8-25 mm	max. 3,5 Nm
AKGMR-L 2020K 3D40	20	20	125	20	20.35	3	40	-	GM - 3	M5x0.8-25 mm	max. 5,5 Nm
AKGMR-L 2525M 3D40	25	25	150	25	25.35	3	40	-	GM - 3	M5x0.8-25 mm	max. 5,5 Nm
AKGMR-L 2020K 4D50	20	20	125	20	20.35	4	50	-	GM - 4	M5x0.8-25 mm	max. 5,5 Nm
AKGMR-L 2525M 4D50	25	25	150	25	25.35	4	50	-	GM - 4	M5x0.8-25 mm	max. 5,5 Nm
AKGMR-L 3232P 4D60	32	32	170	32	32.35	4	60	-	GM - 4	M5x0.8-25 mm	max. 5,5 Nm

EGPR-X3

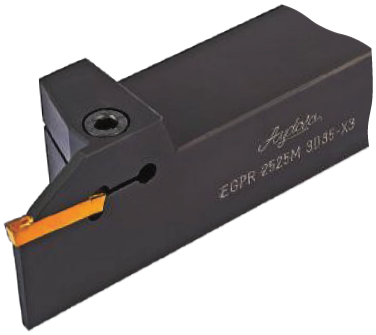

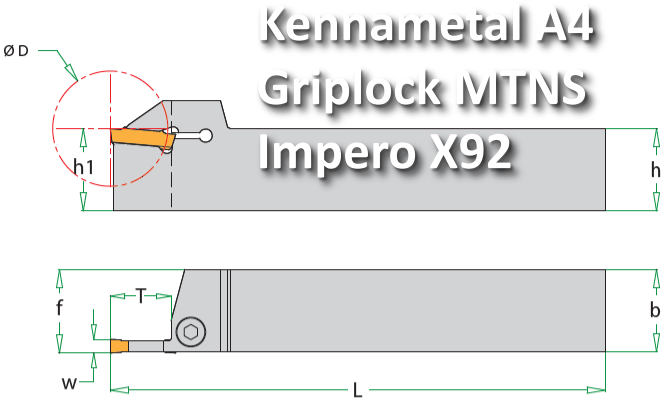

Code No	h	b	L	h1	f	w	Ø D	T	Inserts Platten	Screw Schraube	Tightening Torque Anzugsmoment
EGPR-L 1616K 2D35-X3	16	16	125	16	16.3	2	35	18.5	A4 - 2	M5x0.8-25 mm	max. 3,5 Nm
EGPR-L 2020K 2D35-X3	20	20	125	20	20.3	2	35	18.5	A4 - 2	M5x0.8-25 mm	max. 3,5 Nm
EGPR-L 2525M 2D35-X3	25	25	150	25	25.3	2	35	18.5	A4 - 2	M5x0.8-25 mm	max. 3,5 Nm
EGPR-L 1616K 3D35-X3	16	16	125	16	16.35	3	35	18.5	A4 - 3	M5x0.8-25 mm	max. 5,5 Nm
EGPR-L 2020K 3D35-X3	20	20	125	20	20.35	3	35	18.5	A4 - 3	M5x0.8-25 mm	max. 5,5 Nm
EGPR-L 2525M 3D35-X3	25	25	150	25	25.35	3	35	18.5	A4 - 3	M5x0.8-25 mm	max. 5,5 Nm
EGPR-L 2020K 4D35-X3	20	20	125	20	20.35	4	35	18.5	A4 - 4	M5x0.8-25 mm	max. 5,5 Nm
EGPR-L 2525M 4D35-X3	25	25	150	25	25.35	4	35	18.5	A4 - 4	M5x0.8-25 mm	max. 5,5 Nm

EGPR-KN2

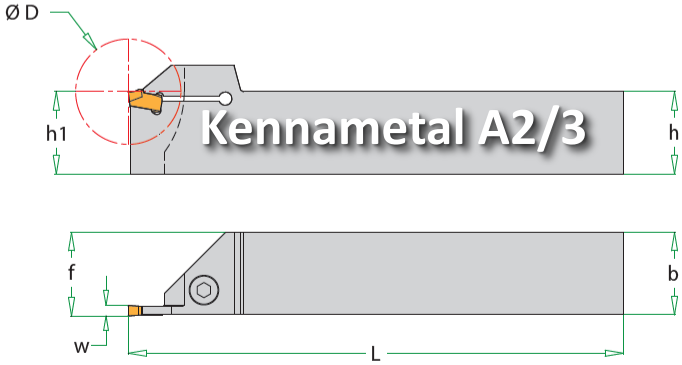

Code No	h	b	L	h1	f	w	Ø D	T	Inserts Platten	Screw Schraube	Tightening Torque Anzugsmoment
EGPR-L 2020K 3D32-KN2	20	20	125	20	20.3	3	32	-	A2-3	M5x0.8-25 mm	max. 5,5 Nm
EGPR-L 2525M 3D32-KN2	25	25	150	25	25.3	3	32	-	A2-3	M5x0.8-25 mm	max. 5,5 Nm

EGPR-LM

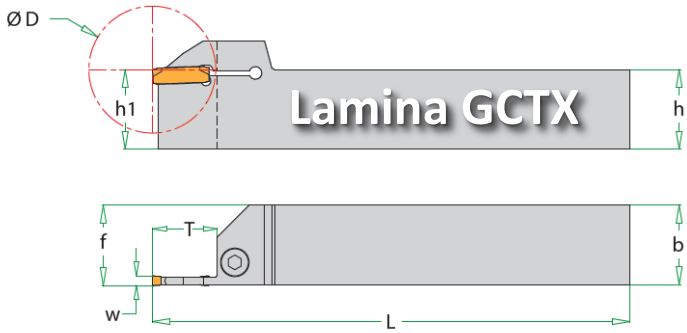

Code No	h	b	L	h1	f	w	Ø D	T	Inserts Platten	Screw Schraube	Tightening Torque Anzugsmoment
EGPR-L 1212K 2D40-LM	12	12	125	12	12.2	2	40	20.5	GCTX - 2	M5x0.8-20 mm	max. 3,5 Nm
EGPR-L 1616K 2D40-LM	16	16	125	16	16.2	2	40	20.5	GCTX - 2	M5x0.8-20 mm	max. 3,5 Nm
EGPR-L 2020K 2D40-LM	20	20	125	20	20.2	2	40	20.5	GCTX - 2	M5x0.8-25 mm	max. 3,5 Nm
EGPR-L 2525M 2D40-LM	25	25	150	25	25.2	2	40	20.5	GCTX - 2	M5x0.8-25 mm	max. 3,5 Nm
EGPR-L 1616K 3D40-LM	16	16	125	16	16.3	3	40	20.5	GCTX - 3	M5x0.8-20 mm	max. 5,5 Nm
EGPR-L 2020K 3D40-LM	20	20	125	20	20.3	3	40	20.5	GCTX - 3	M5x0.8-25 mm	max. 5,5 Nm
EGPR-L 2525M 3D40-LM	25	25	150	25	25.3	3	40	20.5	GCTX - 3	M5x0.8-25 mm	max. 5,5 Nm

EGPR-KR

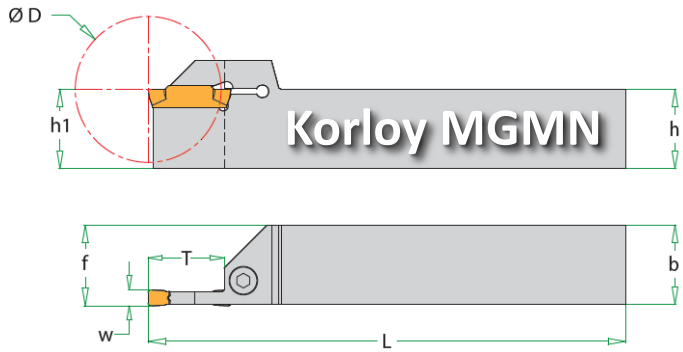

Code No	h	b	L	h1	f	w	Ø D	T	Inserts Platten	Screw Schraube	Tightening Torque Anzugsmoment
EGPR 1010K 2D20-KR	10	10	125	10	10.2	2	20	-	MGM - 2	M4x0.7-15 mm	max. 3,5 Nm
EGPR 1212K 2D25-KR	12	12	125	12	12.2	2	25	-	MGM - 2	M4x0.7-15 mm	max. 3,5 Nm
EGPR 1616K 2D30-KR	16	16	125	16	16.2	2	30	15.5	MGM - 2	M5x0.8-15 mm	max. 5,5 Nm
EGPR 2020K 2D30-KR	20	20	125	20	20.2	2	30	15.5	MGM - 2	M5x0.8-25 mm	max. 5,5 Nm
EGPR 2525M 2D30-KR	25	25	150	25	25.2	2	30	15.5	MGM - 2	M5x0.8-25 mm	max. 5,5 Nm
EGPR 1616K 3D40-KR	16	16	125	16	16.3	3	40	20.5	MGM - 3	M5x0.8-15 mm	max. 5,5 Nm
EGPR 2020K 3D40-KR	20	20	125	20	20.3	3	40	20.5	MGM - 3	M5x0.8-25 mm	max. 5,5 Nm
EGPR 2525M 3D40-KR	25	25	150	25	25.3	3	40	20.5	MGM - 3	M5x0.8-25 mm	max. 5,5 Nm
EGPR 3232P 3D40-KR	32	32	170	32	32.3	3	40	20.5	MGM - 3	M5x0.8-25 mm	max. 5,5 Nm
EGPR 2020K 4D40-KR	20	20	125	20	20.35	4	40	20.5	MGM - 4	M5x0.8-25 mm	max. 5,5 Nm
EGPR 2525M 4D40-KR	25	25	150	25	25.35	4	40	20.5	MGM - 4	M5x0.8-25 mm	max. 5,5 Nm
EGPR 3232P 4D40-KR	32	32	170	32	32.35	4	40	20.5	MGM - 4	M5x0.8-25 mm	max. 5,5 Nm
EGPR 2020K 5D45-KR	20	20	125	20	20.4	5	47	24	MGM - 5	M5x0.8-25 mm	max. 5,5 Nm
EGPR 2525M 5D45-KR	25	25	150	25	25.4	5	47	24	MGM - 5	M5x0.8-25 mm	max. 5,5 Nm
EGPR 3232P 5D45-KR	32	32	170	32	32.4	5	47	24	MGM - 5	M5x0.8-25 mm	max. 5,5 Nm

PKLG

Tool Blocks
Spannblöcke

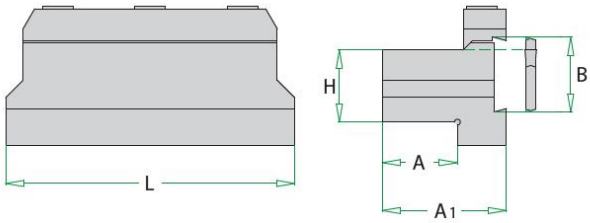

	Code No	H	A	B	L	A1
NEW-NEU	PKLG 1616 -19	16	16	15.5	74	28
	PKLG 2020 - 26	20	20	26	86	38
	PKLG 2525 - 26	25	25	26	100	43
	PKLG 2020 - 32	20	20	32	110	40
	PKLG 2525 - 32	25	25	32	110	45

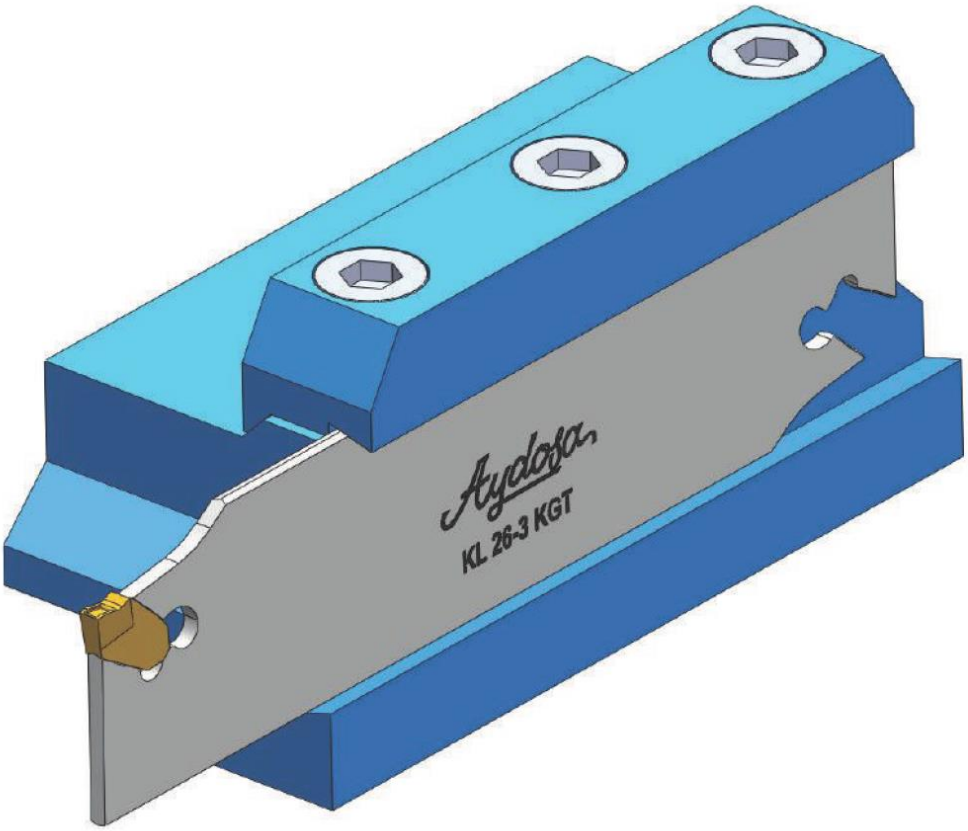

KL-S151

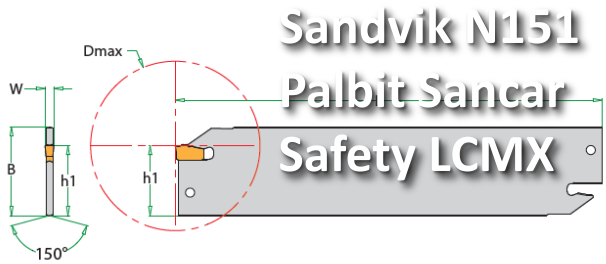

Code No	W	L	B	h1	ØD	Inserts Platten	Extractor - Montageschlüssel
KL 323 - S151	3	150	32	25	100	N151.2-300	LA-1
KL 324 - S151	4	150	32	25	120	N151.2-400	LA-1
KL 325 - S151	5	150	32	25	120	N151.2-500	LA-1

KL-LFMX

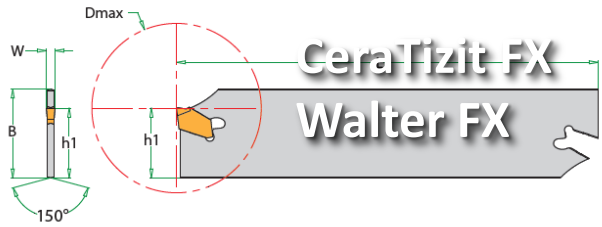

Code No	W	L	B	h1	ØD	Inserts Platten	Extractor - Montageschlüssel
KL 262-LFMX	2	110	26	21.5	50	LEMX-22	LA-4
KL 263-LFMX	3	110	26	21.5	75	LFMX-31	LA-4
KL 264-LFMX	4	110	26	21.5	80	LFMX-41	LA-4
KL 322-LFMX	2	150	32	25	50	LEMX-22	LA-4
KL 323-LFMX	3	150	32	25	100	LFMX-31	LA-4
KL 324-LFMX	4	150	32	25	120	LFMX-41	LA-4

KL- GTN

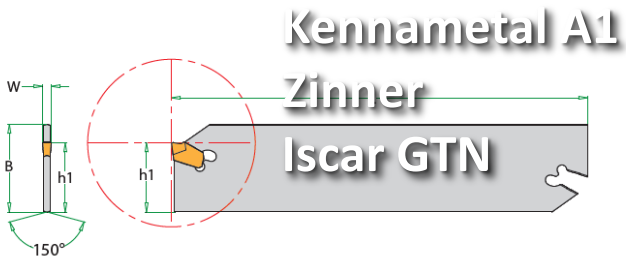

Code No	W	L	B	h1	ØD	Inserts Platten	Extractor - Montageschlüssel
KL 262-GTN	2	110	26	21.5	50	GTN-2	LA-4
KL 263-GTN	3	110	26	21.5	75	GTN-3	LA-4
KL 264-GTN	4	110	26	21.5	80	GTN-4	LA-4
KL 265-GTN	5	110	26	21.5	80	GTN-5	LA-4
KL 322-GTN	2	150	32	25	50	GTN-2	LA-4
KL 323-GTN	3	150	32	25	100	GTN-3	LA-4
KL 324-GTN	4	150	32	25	100	GTN-4	LA-4
KL 325-GTN	5	150	32	25	120	GTN-5	LA-4

KL- KGT

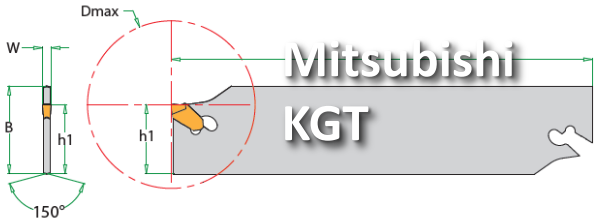

	Code No	W	L	B	h1	ØD	Inserts Platten	Extractor - Montageschlüssel
NEW-NEU	KL 19-2 KGT	2	86	19	15.5	40	KGT-2	LA-4
NEW-NEU	KL 19-3 KGT	3	86	19	15.5	40	KGT-3	LA-4
	KL 26-2 KGT	2	110	26	21.5	50	KGT-2	LA-4
	KL 26-3 KGT	3	110	26	21.5	75	KGT-3	LA-4
	KL 26-4 KGT	4	110	26	21.5	80	KGT-4	LA-4
	KL 26-5 KGT	5	110	26	21.5	80	KGT-5	LA-4
	KL 32-2 KGT	2	150	32	25	50	KGT-2	LA-4
	KL 32-3 KGT	3	150	32	25	100	KGT-3	LA-4
	KL 32-4 KGT	4	150	32	25	100	KGT-4	LA-4
	KL 32-5 KGT	5	150	32	25	120	KGT-5	LA-4

KL- LM

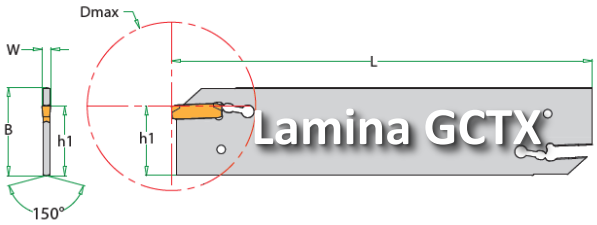

Code No	W	L	B	h1	ØD	Inserts Platten	Extractor - Montageschlüssel
KL 322LM-K5	2	150	32	25	50	GCTX-2	LA-5
KL 323LM-K5	3	150	32	25	100	GCTX-3	LA-5

KL- DG

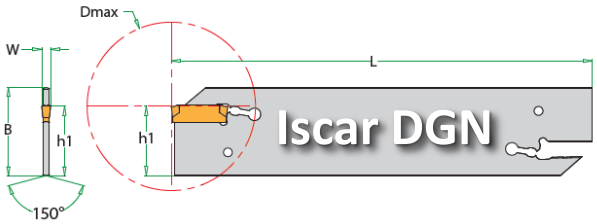

Code No	W	L	B	h1	ØD	Inserts Platten	Extractor - Montageschlüssel
KL 322DG-K5	2	150	32	25	50	DG-2	LA-5
KL 323DG-K5	3	150	32	25	100	DG-3	LA-5

KL- T3

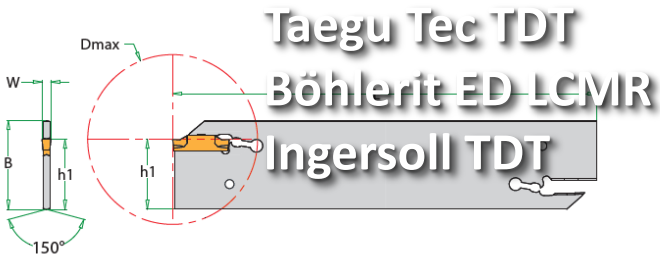

Code No	W	L	B	h1	ØD	Inserts Platten	Extractor - Montageschlüssel
KL 322T3-K5	2	150	32	25	50	T3 - 2	LA-5
KL 323T3-K5	3	150	32	25	100	T3 - 3	LA-5

KL- M

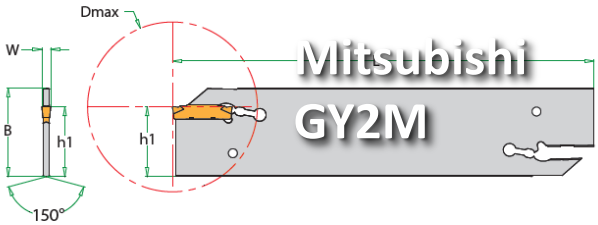

Code No	W	L	B	h1	ØD	Inserts Platten	Extractor - Montageschlüssel
KL 322M-K5	2	150	32	25	50	G.. -2	LA-5
KL 323M-K5	3	150	32	25	100	G.. -3	LA-5
KL 324M-K5	4	150	32	25	120	G.. -4	LA-5

EFGR-S123

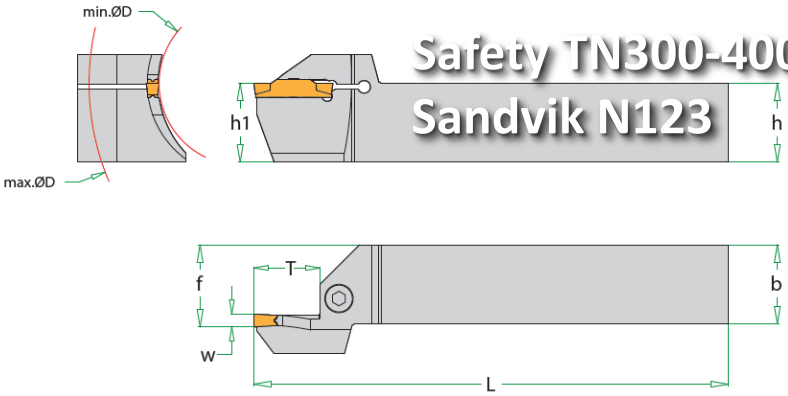

Code No	h	b	L	h1	f	w	min Ø D	max Ø D	T	Inserts Platten	Screw Schraube	Tightening Torque Anzugsmoment
EFGR 2525M 4D52-72 S123	25	25	150	25	26	4	52	72	20	S123.4	M5x0.8-25 mm	max. 5,5 Nm
EFGR 2525M 4D64-100 S123	25	25	150	25	26	4	64	100	25	S123.4	M5x0.8-25 mm	max. 5,5 Nm
EFGR 2525M 4D92-140 S123	25	25	150	25	26	4	92	140	25	S123.4	M5x0.8-25 mm	max. 5,5 Nm
EFGR 2525M 4D132-230 S123	25	25	150	25	26	4	132	230	25	S123.4	M5x0.8-25 mm	max. 5,5 Nm
EFGR 2525M 4D220-500 S123	25	25	150	25	26	4	220	500	25	S123.4	M5x0.8-25 mm	max. 5,5 Nm

EFGR-WT

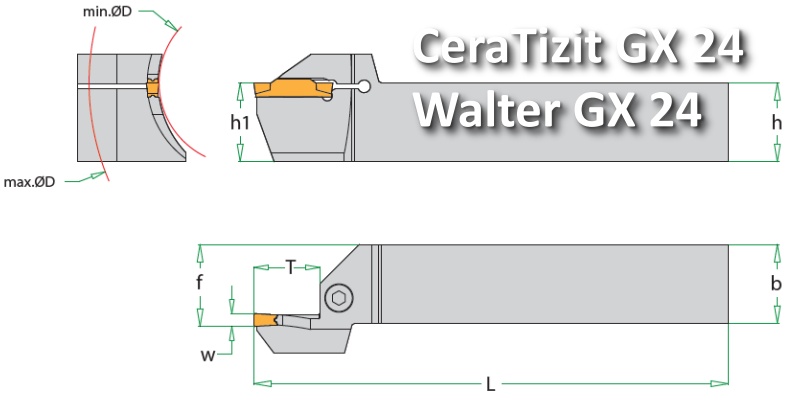

Code No	h	b	L	h1	f	w	min Ø D	max Ø D	T	Inserts Platten	Screw Schraube	Tightening Torque Anzugsmoment
EFGR 2525M 4D40-60.WT	25	25	150	25	26	4	40	60	22	GX24	M5x0.8-25 mm	max. 5,5 Nm
EFGR 2525M 4D52-72.WT	25	25	150	25	26	4	52	72	25	GX24	M5x0.8-25 mm	max. 5,5 Nm
EFGR 2525M 4D64-100.WT	25	25	150	25	26	4	64	100	25	GX24	M5x0.8-25 mm	max. 5,5 Nm
EFGR 2525M 4D92-140.WT	25	25	150	25	26	4	92	140	25	GX24	M5x0.8-25 mm	max. 5,5 Nm
EFGR 2525M 4D132-230.WT	25	25	150	25	26	4	132	230	25	GX24	M5x0.8-25 mm	max. 5,5 Nm
EFGR 2525M 4D220-500.WT	25	25	150	25	26	4	220	500	25	GX24	M5x0.8-25 mm	max. 5,5 Nm

Aydosa®

since 1968

AYDOSA

Menno Scheepmaker

AMW Advanced Metal Working

Waterhuizerweg 50

9753 HS Haren [Gn] Nederland

Mail: info@amwsystems.nl

Web: www.amwsystems.nl Mob: +31 6 48 27 77 13