MEHI Tools

Catalogue 2012

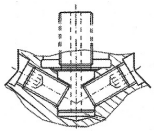

Features

Hole machining tools in:

- Universal carrier design [steel and aluminium]
- Tailor made carrier design [steel and aluminium]
- Face - and back face operations

A modular build system with:

- DIN - and JIS connections
- Own design connection parts

Toolholders with pocket seats for:

- ISO inserts
- System inserts
- Special inserts

Insert tipped tailor made tooling in:

- Monoblock design
- Modular design
- Stationary - and rotary applications

Adjustable standard cartridges for:

- Finishing operations
- Semi - finishing operations

Added value through:

- High quality raw materials
- Modern machinery and production methods
- 2 - and 3 D design software
- On special tooling:
- Accurate quotation and short lead times
- Implementation of tooling

Index

System overvieuw

Steep taper			HSK taper
DIN 2080	DIN 69871	MAS BT / JIS	DIN 69893

ID and OD tool connection			
DIN 1835B	DIN 6357	DIN 6358	MEHI WN

Extensions and reductions [DIN]			
EB model A	EB model B	RB model A	RB model B

Roughing / finishing boring bars OD tool connection		
TF	TVA	ATW

Roughing boring heads / bridges ID tool connection	
1TP	2TP

Finishing boring heads / bridges ID tool connection			
A1FL	1THF	A2AL	1TAF

Toolholders for				
TF model LF	1TP model 1LC and 1LT	2TP model 2LC and 2LT	A2AL model 1LVA and F	1TAF model 1LVA and F

Fine boring units for				
TVA model VAL	A1F model AF50	1THF model VAL	A2AL model VNL and AF50	1TAF model VNL and AF50

System overvieuw

Adjustment cartridges for tailor made tooling

Model AF20 | **Model AF25**

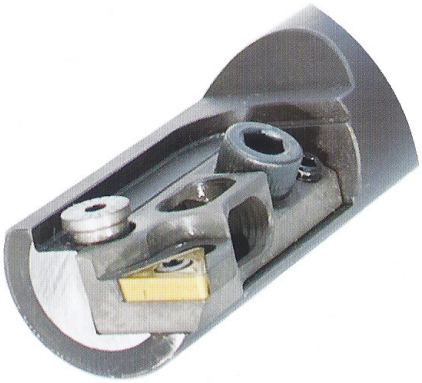

Insert types

ISO	System	Special
CC..0602..	1.21103L..	On request
CC..09T3..	1.21503L..	
CC..1204..	SPHX0602..	
RC..0803..	SPHX0903..	
RC..10T3M0	SPHX1204..	
TC..06T1..	SPHX1505..	
TC..1102..	Others types on request	
TC..16T3..		
TP..1103..		
TP..1603..		
Others types on request		

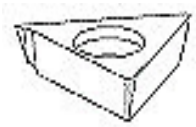

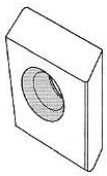

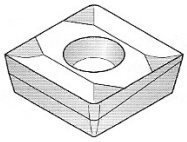

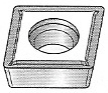

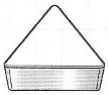

Machining range and types

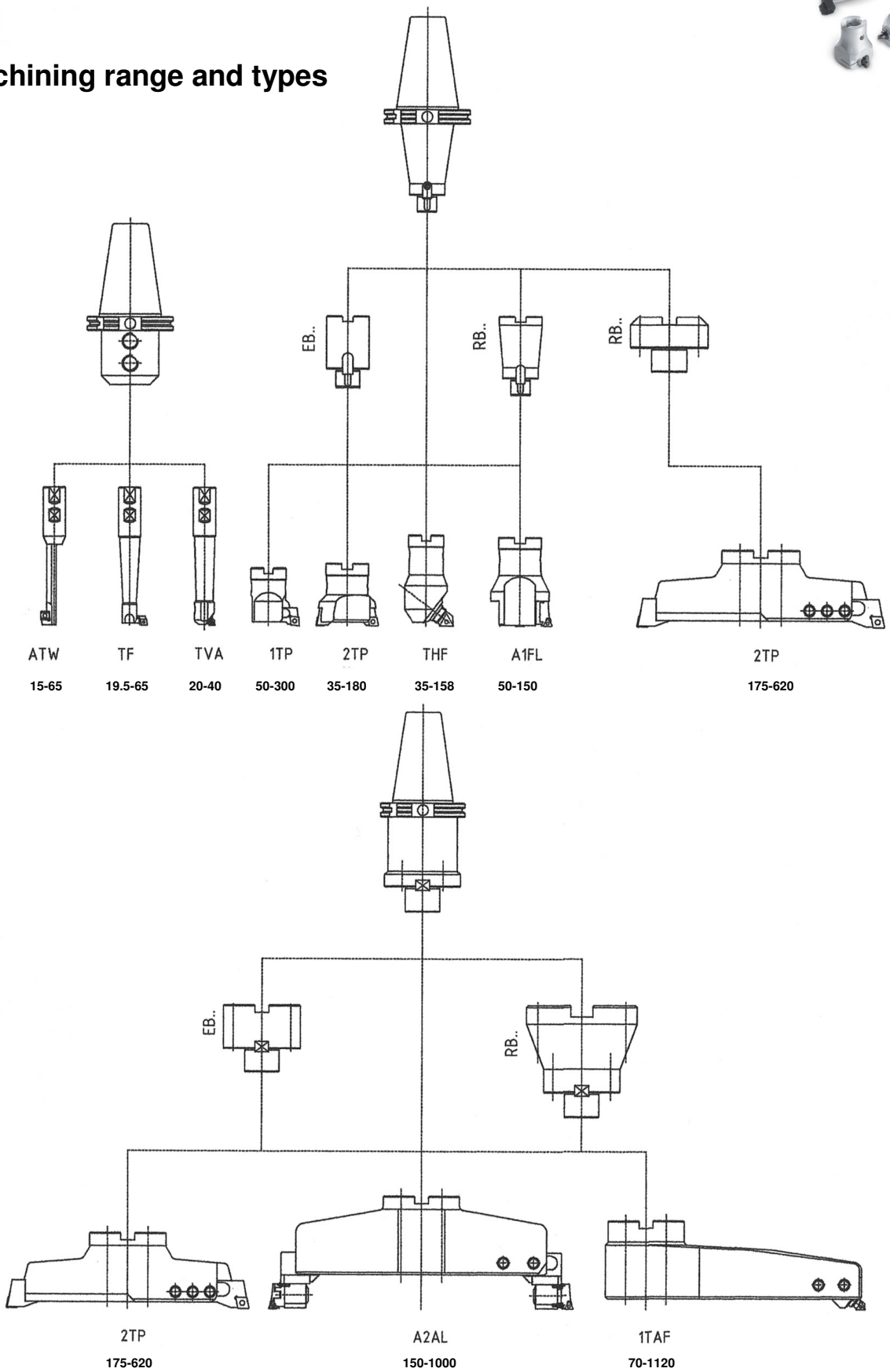

Tool selector

Operation example:	**hole machining from *75* to *80* mm IT8**
	depth *200* mm
	90° step at bottom
	high production load
Spindel example:	**HSK 63 A DIN69893**

1.

Boring heads:

	roughing		finishing
Ø19.5-65	TF	Ø20-40	TVA
Ø50-300	1TP	Ø50-150	A1FL
Ø35-620	2TP	Ø35-158	1THF
		Ø150-800	A2AL
		Ø70-1120	1TAF

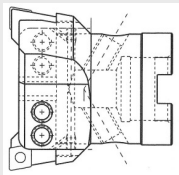

Ø70-90 ***2TP 070***

Features: **roughing type with 27 mm ID adapter**
in diameter range for *80* mm
length dimension *66* mm

2.

Adapter type HSK 63A to DIN:

DIN 6358	DIN 6357
G640…	G643…

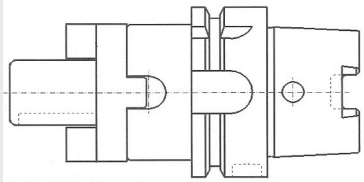

G640A 63 x 40 x 70

Features: **maximum face contact**
biggest possible ID adapter *40* mm]
length dimension *70* mm [overall length choosen parts = *136* mm]

3.

Reduction type RB:

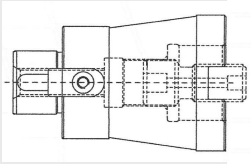

RB 4027.100

Features: **maximum face contact**
biggest possible diameter reduction [ID adapter *40* to *27* mm]
lenght dimension *100* mm [overall length choosen parts = *236* mm]

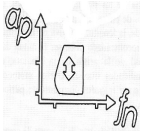

Application selector

Workpiece example:	**Nodular cast iron EN GJS 500**	**< 250HB**
	90° Step at bottom	
	preferred insert style ISO	

1.

Toolholders:

	ISO		System
Ø35-620	**2LC…**	**Ø70-620**	**2LT...**

Ø70-90 ***2LC07090***

Features: **build for 2TP 070 boring head**
CC..09T3 ISO insert pocket seat
90° attack angle

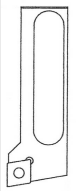

2.

Inserts:

	P M K S H material group	**N material group**
	CCMT09T3..	**CCGT09T3..**

K ***CCMT09T308 WM PTT20***

Features: **though reliable grade**
0.8 mm radius for high feed rate
bumpy geometry for low heat generation

3.

Cutting values:

Cutting speed Vc:	**120 m/min [n=478 r.p.m.]**
Feed rate Fn:	**0.4 mm [z=2] [Vf=191 mm/min]**
Depth of cut Ap/D.O.C.:	**2.5 mm**
Metal removal rate Q:	**0.48 cm³/min**
Machining time Tc:	**62.8 seconds**

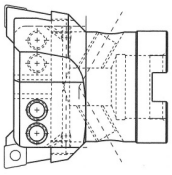

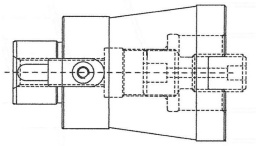

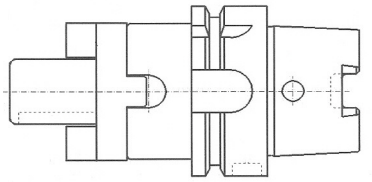

Adapter types

G…	coolant through center form AD
G…D	combined coolant version form AD-B

DIN 2080 / Tool connection DIN 1835-B

			d1 x A
Steep taper	30	G120	30 x 20 x 63
	40	G120	40 x 20 x 63
	40	G120	40 x 25 x 35
	40	G120	40 x 25 x 80
	40	G120	40 x 32 x 80
	50	G120	50 x 20 x 63
	50	G120	50 x 25 x 80
	50	G120	50 x 32 x 80
	50	G120	50 x 40 x 90

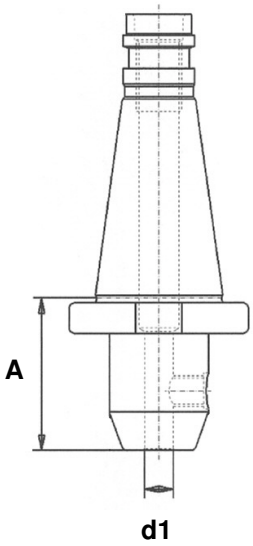

DIN 69871 Form AD and AD-B / Tool connection DIN 1835-B

			d1 x A
Steep taper	30	G320	30 x 20 x 63
	40	G320/D	40 x 20 x 35
	40	G320/D	40 x 20 x 63
	40	G320/D	40 x 20 x 100
	40	G320D	40 x 20 x 160
	40	G320D	40 x 20 x 200
	40	G320	40 x 20 x 250
	40	G320/D	40 x 25 x 35
	40	G320/D	40 x 25 x 100
	40	G320D	40 x 25 x 160
	40	G320D	40 x 25 x 200
	40	G320	40 x 25 x 250
	40	G320D	40 x 32 x 63
	40	G320/D	40 x 32 x 100
	40	G320D	40 x 32 x 160
	40	G320D	40 x 32 x 200
	40	G320/D	40 x 40 x 120

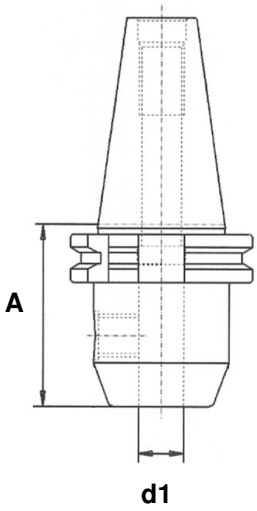

Adapter types

G…	coolant through center form AD
G…D	combined coolant version form AD-B

DIN 69871 Form AD and AD-B / Tool connection DIN 1835-B

			d1 x A
Steep taper	50	G320D	50 x 20 x 35
	50	G320/D	50 x 20 x 63
	50	G320/D	50 x 20 x 100
	50	G320D	50 x 20 x 160
	50	G320/D	50 x 20 x 200
	50	G320	50 x 20 x 250
	50	G320/D	50 x 25 x 35
	50	G320/D	50 x 25 x 80
	50	G320D	50 x 25 x 160
	50	G320D	50 x 25 x 200
	50	G320	50 x 25 x 250
	50	G320D	50 x 32 x 63
	50	G320/D	50 x 32 x 100
	50	G320D	50 x 32 x 160
	50	G320D	50 x 32 x 200
	50	G320/D	50 x 40 x 100

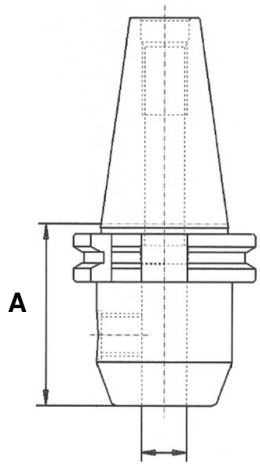

MAS - BT/JIS AD and AD-B / Tool connection DIN 1835-B

			d1 x A
Steep taper	30	G420	30 x 20 x 63
	40	G420/D	40 x 20 x 63
	40	G420/D	40 x 20 x 100
	40	G420/D	40 x 20 x 160
	40	G420D	40 x 25 x 35
	40	G420/D	40 x 25 x 100
	40	G420D	40 x 25 x 160
	40	G420/D	40 x 32 x 100
	40	G420D	40 x 32 x 160
	40	G420/D	40 x 40 x 120

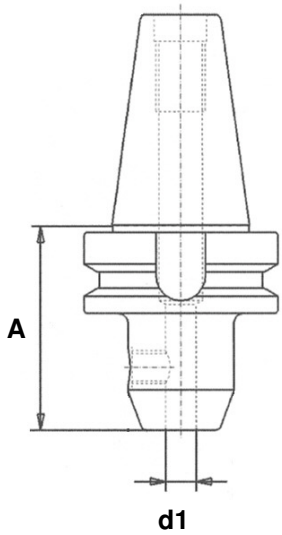

Adapter types

G…	coolant through center form AD
G…D	combined coolant version form AD-B

MAS - BT/JIS AD and AD-B / Tool connection DIN 1835-B

			d1 x A
Steep taper	50	G420/D	50 x 20 x 80
	50	G420	50 x 20 x 100
	50	G420	50 x 20 x 160
	50	G420/D	50 x 25 x 100
	50	G420	50 x 25 x 160
	50	G420/D	50 x 32 x 105
	50	G420	50 x 32 x 160
	50	G420/D	50 x 40 x 120

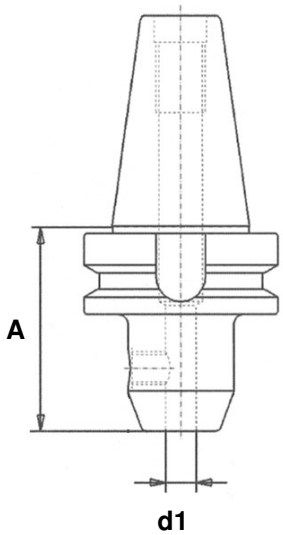

HSK DIN 69893 / Tool connection DIN 1835-B

			d1 x A
HSK taper	63	G620A63	20 x 80
	63	G620A63	20 x 100
	63	G620A63	20 x 160
	63	G620A63	25 x 110
	63	G620A63	25 x 160
	63	G620A63	32 x 110
	100	G620A100	20 x 110
	100	G620A100	20 x 160
	100	G620A100	25 x 120
	100	G620A100	25 x 160
	100	G620A100	32 x 120
	100	G620A100	40 x 120

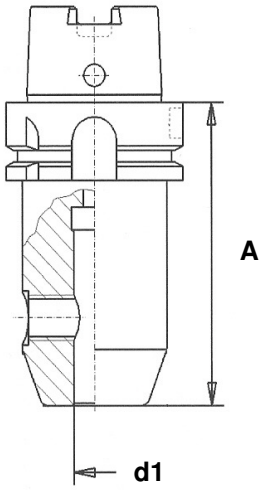

Adapter types

No internal coolant supply

DIN 2080 / Tool connection DIN 6358

			d1 x A [x d2]
Steep taper	30	G140	30 x 16 x 35 [x 32]
	30	G140	30 x 22 x 35 [x 40]
	30	G140	30 x 27 x 35 [x 48]
	30	G140	30 x 32 x 50 [x 58]
	40	G140	40 x 16 x 52 [x 32]
	40	G140	40 x 22 x 52 [x 40]
	40	G140	40 x 27 x 52 [x 48]
	40	G140	40 x 32 x 52 [x 58]
	40	G140	40 x 40 x 52 [x 70]
	50	G140	50 x 16 x 55 [x 32]
	50	G140	50 x 22 x 55 [x 40]
	50	G140	50 x 27 x 55 [x 48]
	50	G140	50 x 32 x 55 [x 58]
	50	G140	50 x 40 x 55 [x 70]

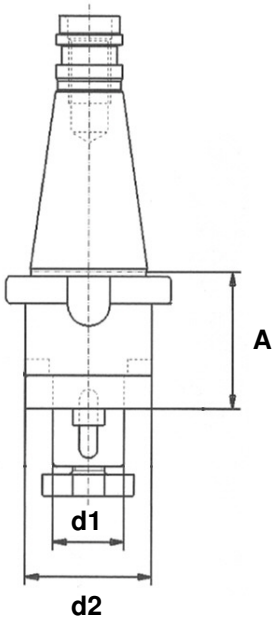

DIN 2080 / Tool connection DIN 6357

			d1 x A [x d2]
Steep taper	40	G142	40 x 16 x 30 [x 38]
	40	G142	40 x 22 x 30 [x 48]
	40	G142	40 x 27 x 30 [x 60]
	40	G142	40 x 32 x 30 [x 78]
	40	G142	40 x 40 x 30 [x 89]
	50	G142	50 x 22 x 35 [x 48]
	50	G142	50 x 27 x 35 [x 60]
	50	G142	50 x 32 x 40 [x 78]
	50	G142	50 x 40 x 33 [x 89]
	50	G142	50 x 60 x 55 [x 129]

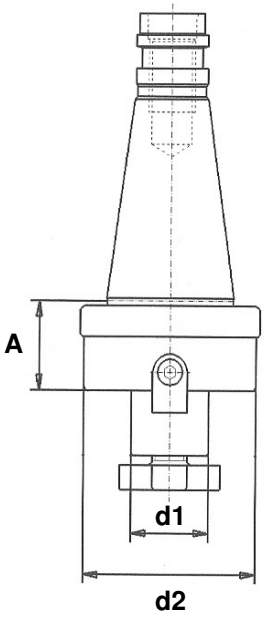

Adapter types

No internal coolant supply

With coolant form AD/B on request

DIN 69871 / Tool connection DIN 6358

			d1 x A [x d2]
Steep taper	30	G340	30 x 16 x 50 [x 32]
	30	G340	30 x 16 x 100 [x 32]
	30	G340	30 x 22 x 50 [x 40]
	30	G340	30 x 27 x 55 [x 48]
	30	G340	30 x 32 x 60 [x 58]
	30	G340	30 x 32 x 100 [x 58]
	40	G340	40 x 16 x 55 [x 32]
	40	G340	40 x 16 x 100 [x 32]
	40	G340	40 x 16 x 160 [x 32]
	40	G340	40 x 22 x 55 [x 40]
	40	G340	40 x 22 x 100 [x 40]
	40	G340	40 x 22 x 160 [x 40]
	40	G340	40 x 27 x 62 [x 48]
	40	G340	40 x 27 x 100 [x 48]
	40	G340	40 x 27 x 160 [x 48]
	40	G340	40 x 32 x 69 [x 58]
	40	G340	40 x 32 x 100 [x 58]
	40	G340	40 x 32 x 160 [x 58]
	40	G340	40 x 40 x 60 [x 70]
	40	G340	40 x 40 x 100 [x 70]
	40	G340	40 x 40 x 160 [x 70]

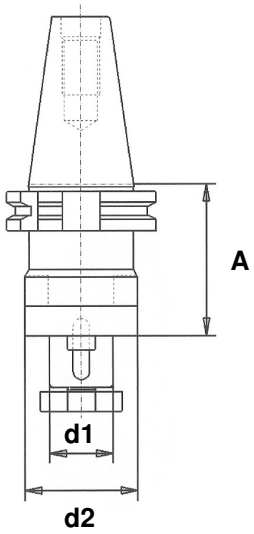

Adapter types

No internal coolant supply

With coolant form AD/B on request

DIN 69871 / Tool connection DIN 6358

			d1 x A [x d2]
Steep taper	50	G340	50 x 16 x 55 [x 32]
	50	G340	50 x 16 x 100 [x 32]
	50	G340	50 x 16 x 160 [x 32]
	50	G340	50 x 22 x 55 [x 40]
	50	G340	50 x 22 x 100 [x 40]
	50	G340	50 x 22 x 160 [x 40]
	50	G340	50 x 27 x 55 [x 48]
	50	G340	50 x 27 x 100 [x 48]
	50	G340	50 x 27 x 160 [x 48]
	50	G340	50 x 32 x 55 [x 58]
	50	G340	50 x 32 x 100 [x 58]
	50	G340	50 x 32 x 160 [x 58]
	50	G340	50 x 40 x 55 [x 70]
	50	G340	50 x 40 x 100 [x 70]
	50	G340	50 x 40 x 160 [x 70]

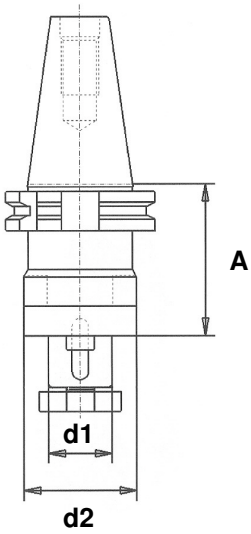

Adapter types

G… no internal coolant supply version form A

G…D combined coolant version form AD/B

DIN 69871 / Tool connection DIN 6357

			d1 x A [x d2]
Steep taper	30	G342	30 x 16 x 40 [x 38]
	30	G342	30 x 22 x 40 [x 48]
	30	G342	30 x 27 x 50 [x 58]
	30	G342	30 x 32 x 50 [x 78]
	40	G342/D	40 x 16 x 35 [x 40]
	40	G342/D	40 x 16 x 100 [x 40]
	40	G342	40 x 16 x 160 [x 38]
	40	G342/D	40 x 22 x 35 [x 45]
	40	G342/D	40 x 22 x 50 [x 48]
	40	G342/D	40 x 22 x 100 [x 48]
	40	G342	40 x 22 x 160 [x 48]
	40	G342/D	40 x 27 x 35 [x 45]
	40	G342/D	40 x 27 x 50 [x 60]
	40	G342/D	40 x 27 x 100 [x 58]
	40	G342/D	40 x 32 x 55 [x 78]
	40	G342/D	40 x 32 x 100 [x 78]
	40	G342/D	40 x 40 x 60 [x 89]
	40	G342	40 x 40 x 100 [x 89]
	50	G342	50 x 16 x 45 [x 38]
	50	G342/D	50 x 22 x 35 [x 48]
	50	G342/D	50 x 22 x 100 [x 48]
	50	G342	50 x 22 x 160 [x 46]
	50	G342/D	50 x 27 x 35 [x 58]
	50	G342/D	50 x 27 x 100 [x 58]
	50	G342	50 x 27 x 160 [x 55]
	50	G342/D	50 x 32 x 35 [x 78]
	50	G342/D	50 x 32 x 100 [x 78]
	50	G342	50 x 32 x 160 [x 66]
	50	G342/D	50 x 40 x 55 [x 89]
	50	G342/D	50 x 60 x 70 [x 129]

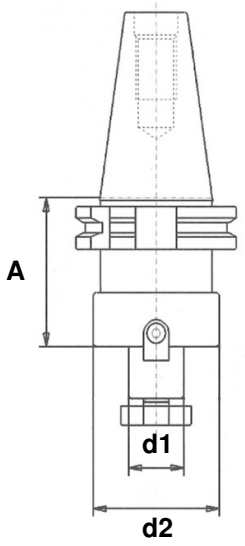

Adapter types

No internal coolant supply

With coolant form AD/B on request

MAS - BT/JIS and version AD-B / Tool connection DIN 6358

			d1 x A [x d2]
Steep taper	30	G440	30 x 16 x 45 [x 32]
	30	G440	30 x 22 x 47 [x 40]
	30	G440	30 x 27 x 49 [x 48]
	40	G440	40 x 16 x 55 [x 32]
	40	G440	40 x 16 x 100 [x 32]
	40	G440	40 x 16 x 160 [x 32]
	40	G440	40 x 22 x 55 [x 40]
	40	G440	40 x 22 x 100 [x 40]
	40	G440	40 x 22 x 160 [x 40]
	40	G440	40 x 27 x 55 [x 48]
	40	G440	40 x 27 x 100 [x 48]
	40	G440	40 x 27 x 160 [x 48]
	40	G440	40 x 32 x 60 [x 58]
	40	G440	40 x 32 x 100 [x 58]
	40	G440	40 x 32 x 160 [x 58]
	40	G440	40 x 40 x 60 [x 70]
	40	G440	40 x 40 x 100 [x 70]
	40	G440	40 x 40 x 160 [x 70]

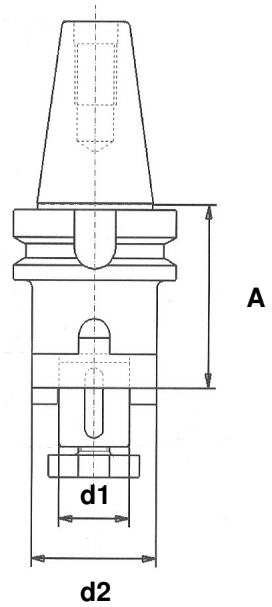

Adapter types

No internal coolant supply

With coolant form AD/B on request

MAS - BT/JIS version A and AD-B / Tool connection DIN 6358

			d1 x A [x d2]
Steep taper	50	G440	50 x 16 x 70 [x 32]
	50	G440	50 x 16 x 100 [x 32]
	50	G440	50 x 16 x 160 [x 32]
	50	G440	50 x 22 x 70 [x 40]
	50	G440	50 x 22 x 100 [x 40]
	50	G440	50 x 22 x 160 [x 40]
	50	G440	50 x 27 x 70 [x 48]
	50	G440	50 x 27 x 100 [x 48]
	50	G440	50 x 27 x 160 [x 48]
	50	G440	50 x 32 x 70 [x 58]
	50	G440	50 x 32 x 100 [x 58]
	50	G440	50 x 32 x 160 [x 58]
	50	G440	50 x 40 x 70 [x 70]
	50	G440	50 x 40 x 100 [x 70]
	50	G440	50 x 40 x 160 [x 70]

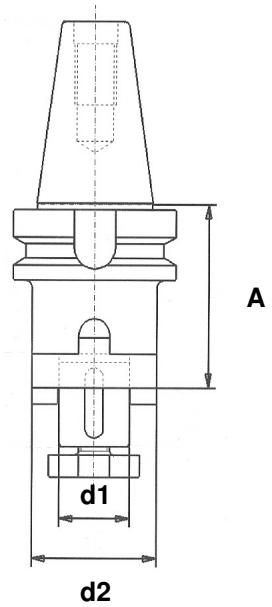

Adapter types

G… no internal coolant supply version form A

G…D combined coolant version form AD/B

MAS - BT/JIS version A and AD-B / Tool connection DIN 6357

			d1 x A [x d2]
Steep taper	40	G442/D	40 x 16 x 45 [x 38]
	40	G442/D	40 x 16 x 100 [x 40]
	40	G442/D	40 x 22 x 45 [x 48]
	40	G442/D	40 x 22 x 100 [x 48]
	40	G442/D	40 x 27 x 45 [x 60]
	40	G442/D	40 x 27 x 100 [x 60]
	40	G442/D	40 x 32 x 50 [x 78]
	40	G442/D	40 x 32 x 100 [x 78]
	40	G442/D	40 x 40 x 55 [x 89]
	40	G442	40 x 40 x 100 [x 89]
	50	G442	50 x 16 x 100 [x 39]
	50	G442	50 x 16 x 160 [x 39]
	50	G442/D	50 x 22 x 55 [x 48]
	50	G442/D	50 x 22 x 100 [x 48]
	50	G442	50 x 22 x 160 [x 48]
	50	G442	50 x 22 x 200 [x 48]
	50	G442/D	50 x 27 x 55 [x 60]
	50	G442/D	50 x 27 x 100 [x 58]
	50	G442	50 x 27 x 160 [x 55]
	50	G442	50 x 27 x 200 [x 55]
	50	G442/D	50 x 32 x 55 [x 78]
	50	G442/D	50 x 32 x 100 [x 78]
	50	G442	50 x 32 x 160 [x 78]
	50	G442	50 x 32 x 200 [x 78]
	50	G442/D	50 x 40 x 55 [x 89]
	50	G442/D	50 x 40 x 100 [x 89]
	50	G442	50 x 60 x 80 [x 129]

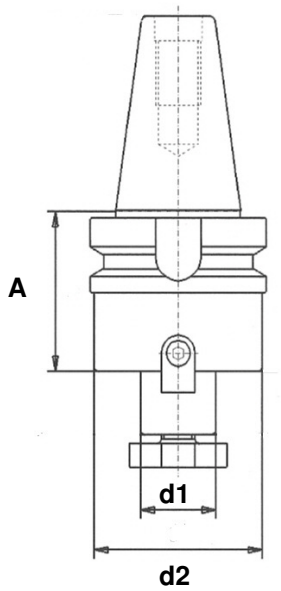

Adapter types

G…A no internal coolant supply version form A

G…Kü combined coolant version form AD

HSK DIN 69893 / Tool connection DIN 6358

			d1 x A [x d2]
Hollow taper	63	G640A	63 x 16 x 60 [x 32]
	63	G640A	63 x 22 x 60 [x 40]
	63	G640A	63 x 27 x 60 [x 48]
	63	G640A	63 x 32 x 60 [x 58]
	63	G640A	63 x 40 x 70 [x 70]
	100	G640A	100 x 16 x 60 [x 32]
	100	G640A	100 x 22 x 60 [x 40]
	100	G640A	100 x 27 x 60 [x 48]
	100	G640A	100 x 32 x 60 [x 58]
	100	G640A	100 x 40 x 70 [x 70]

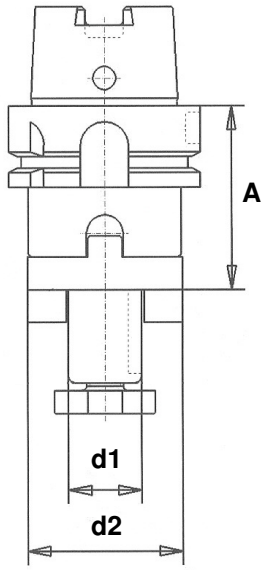

HSK DIN 69893 / Tool connection DIN 6357

			d1 x A [x d2]
Hollow taper	63	G643A	63 x 16 x 45 [x 38]
	63	G643A/Kü	63 x 16 x 50 [x 38]
	63	G643A	63 x 16 x 160 [x 32]
	63	G643A	63 x 22 x 50 [x 48]
	63	G643A/Kü	63 x 22 x 50 [x 48]
	63	G643A	63 x 22 x 160 [x 40]
	63	G643A	63 x 27 x 60 [x 60]
	63	G643A/Kü	63 x 27 x 60 [x 60]
	63	G643A	63 x 27 x 160 [x 48]
	63	G643A	63 x 32 x 60 [x 78]
	63	G643A/Kü	63 x 32 x 60 [x 78]
	63	G643A	63 x 32 x 160 [x 58]
	63	G643A	63 x 40 x 60 [x 89]
	63	G643A/Kü	63 x 40 x 60 [x 89]
	63	G643A	63 x 40 x 160 [x 70]

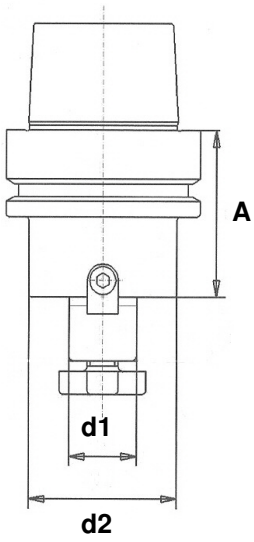

Adapter types

G…A no internal coolant supply version form A

G…Kü combined coolant version form AD

HSK DIN 69893 / Tool connection DIN 6357

			d1 x A [x d2]
Hollow taper	100	G643A1	100 x 16 x 55 [x 32]
	100	G643A1/Kü	100 x 16 x 55 [x 32]
	100	G643A1	100 x 22 x 55 [x 40]
	100	G643A1/Kü	100 x 22 x 55 [x 40]
	100	G643A1	100 x 27 x 55 [x 48]
	100	G643A1/Kü	100 x 27 x 55 [x 48]
	100	G643A1	100 x 32 x 60 [x 58]
	100	G643A1/Kü	100 x 32 x 60 [x 58]
	100	G643A1	100 x 40 x 60 [x 70]
	100	G643A1/Kü	100 x 40 x 65 [x 70]
	100	G643A1/Kü	100 x 60 x 70 [x 70]

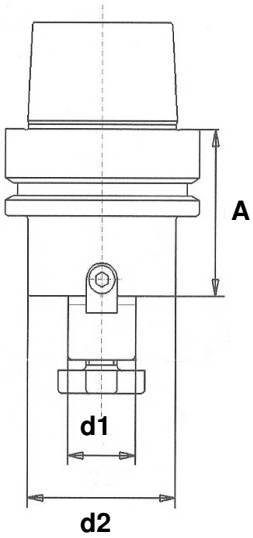

Adapter types

Combined coolant form AD

Adjustable adapter types / Tool connection MEHI WN to DIN 1835B

Article n° / steep taper	adj. range	attachment	d3	A
YD 40.2080				
40 DIN 2080 form A	+/- 2 mm	WN..4	49	50
YD 50.2080				
50 DIN 2080 form B	+/- 3 mm	WN..5	79	50
YD 40.69871				
40 DIN 69871 form A	+/- 2 mm	WN..4	49	50
YD 50.69871				
50 DIN 69871 form A and B	+/- 3 mm	WN..5	79	50
YHSK 63.69893				
63 DIN 69893 A	+/- 2 mm	WN..4	49	50
YHSK 100.69893				
100 DIN 69893 A	+/- 3 mm	WN..5	79	50
YBT 40				
40 MAS BT/JIS form A	+/- 2 mm	WN..4	49	70
YBT 50				
50 MAS BT/JIS form B	+/- 3 mm	WN..5	79	70

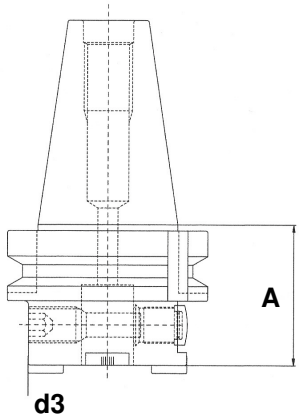

MEHI double attachment WN to DIN 1835B + E

	ST	Article n°	d	d2	d3	A
Steep taper	40	WN 204	20	48	49	50
	40	WN 254	25	58	49	60
	40	WN 324	32	58	49	65
	50	WN 205	20	48	79	50
	50	WN 255	25	58	79	60
	50	WN 325	32	58	79	65
	50	WN 405	40	70	79	85

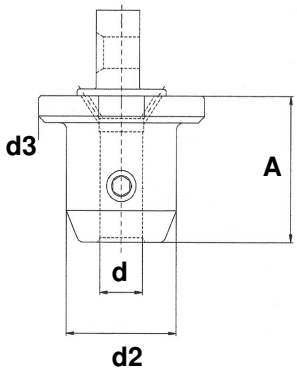

Roughing / semi - finishing boring bar

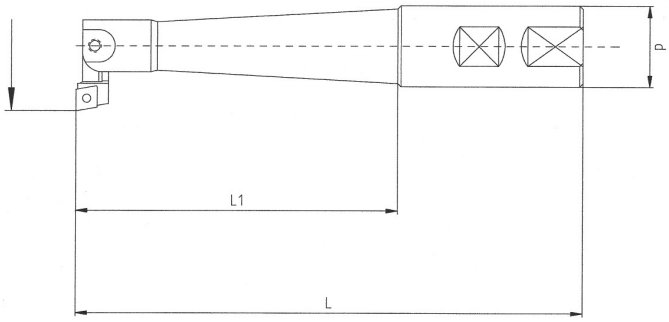

Article n°	Adj. range	d h5	l1	l	Toolholder
TF 195 20	19.5 - 24.0	20	70	120	LF 19
TF 240 20	24.0 - 34.0	20	80	130	LF 24
TF 240 25	24.0 - 34.0	25	80	136	LF 24
TF 330 25	33.0 - 46.0	25	100	156	LF 33
TF 330 32	33.0 - 46.0	32	100	160	LF 33
TF 450 32	45.0 - 65.0	32	120	180	LF 45
TF 450 40	45.0 - 65.0	40	120	190	LF 45

Toolholders and spare parts

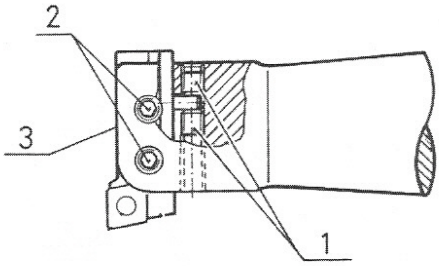

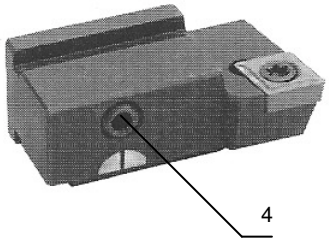

Article n°	Boring bar n°	Screw 1	Screw 2	Screw 3	Screw 4	Insert
LF 19	TF 195 20	M5 4	M5 5	SE 19	191.131	CC..0602..
LF 24	TF 240 20/25	M5 6	M5 5	SE 24	191.131	CC..0602..
LF 33	TF 330 25/32	M6 6	M6 6	SE 33	191.131	CC..0602..
LF 45	TF 450 32/40	M6 8	M6 10	SE 45	191.372	CC..09T3..

Finishing boring bar

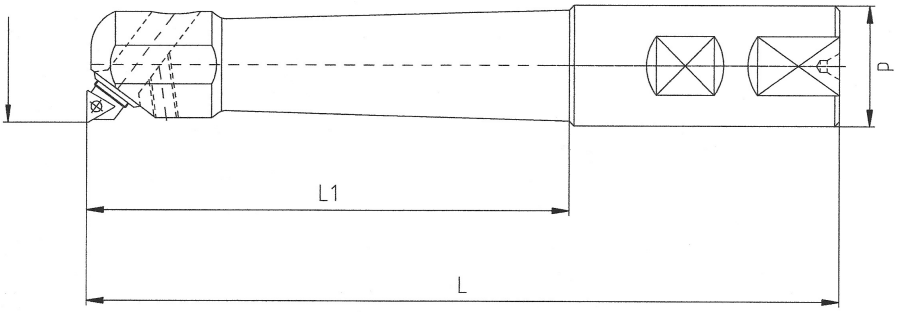

Article n°	Adj. range	d h5	l1	l	Boring unit
TVA 20 20	20.0 - 24.0	20	70	120	VALX83.90TC06
TVA 20 25	20.0 - 24.0	25	100	156	VALX83.90TC06
TVA 24 25	24.0 - 28.0	25	100	156	VAL083.90TC06
TVA 28 25	28.0 - 32.0	25	100	156	VAL083.90TC06
TVA 32 32	32.0 - 36.0	32	100	160	VAL083.90TC06
TVA 36 32	36.0 - 40.0	32	100	160	VAL083.90TC06

Boring units

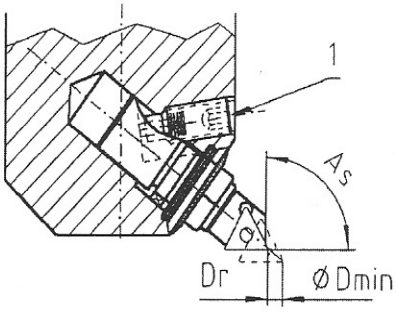

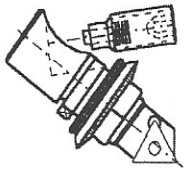

Article n°	Dmin	Dr	AS	Screw 1	Insert screw	Insert
VALX83.90TC06	20	2.25	90	M5 x 12J	191.164	TC..06T1..
VAL083.90TC06	23.5	2.25	90	M5 x 12J	191.164	TC..06T1..

Back face boring bar

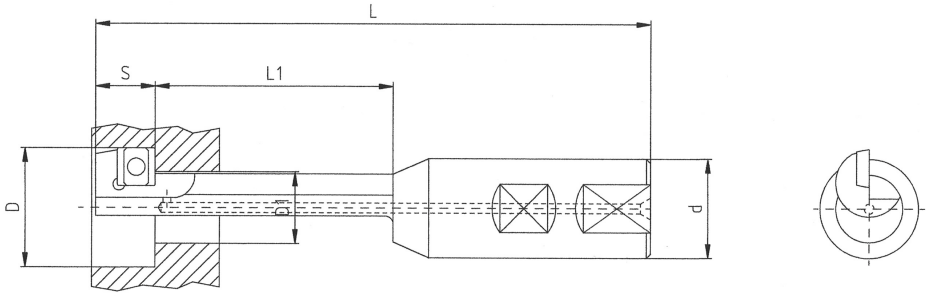

Article n°	D	D1	d h6	S	L	L1	Insert screw	Insert
ATW0915	15	9	20	12	97	30	192.432	SPHX 0602..R - 20
ATW1018	18	10	25	12	112	35	192.432	SPHX 0602..R - 20
ATW1220	20	12	25	12	117	40	192.432	SPHX 0602..R - 20
ATW1420	20	14	25	15	161	85	192.432	SPHX 0602..R - 20
ATW1422	22	14	25	12	127	50	192.432	SPHX 0602..R - 20
ATW1424	24	14	25	12	127	50	192.432	SPHX 0602..R - 20
ATW1626	26	16	25	15	130	50	191.924	SPHX 0903..R - 20
ATW1830	30	18	25	15	140	60	191.942	SPHX 0903..R - 20
ATW1832	32	18	32	16	136	55	191.924	SPHX 0903..R - 20
ATW2032	32	20	32	15	145	65	191.924	SPHX 0903..R - 20
ATW2033	33	20	32	15	145	65	191.942	SPHX 0903..R - 20
ATW2236	36	22	32	15	150	70	191.942	SPHX 0903..R - 20
ATW2239	39	22	32	15	150	70	191.924	SPHX 0903..R - 20
ATW2240	40	22	32	15	150	70	191.924	SPHX 0903..R - 20
ATW2337	37	23	32	15	130	50	191.924	SPHX 0903..R - 20
ATW2438	38	24	32	15	160	80	191.924	SPHX 0903..R - 20
ATW2440	40	24	32	15	160	80	191.924	SPHX 0903..R - 20
ATW2645	45	26	40	20	155	60	191.916	SPHX 1204..R - 20
ATW2646	46	26	40	20	155	60	191.916	SPHX 1204..R - 20
ATW2648	48	26	40	20	155	60	191.916	SPHX 1204..R - 20
ATW2743	43	27	32	15	165	85	191.924	SPHX 0903..R - 20
ATW2848	48	28	40	20	195	100	191.916	SPHX 1204..R - 20
ATW3048	48	30	40	20	195	100	191.916	SPHX 1204..R - 20
ATW3055	55	30	40	20	200	105	191.916	SPHX 1204..R - 20
ATW3254	54	32	40	20	170	70	191.916	SPHX 1204..R - 20
ATW3353	53	33	40	20	200	105	191.916	SPHX 1204..R - 20
ATW3657	57	36	40	20	210	115	191.916	SPHX 1204..R - 20
ATW4165	65	41	40	25	250	150	191.754	SPHX 1505..R - 20

Extension types

EB model A & B

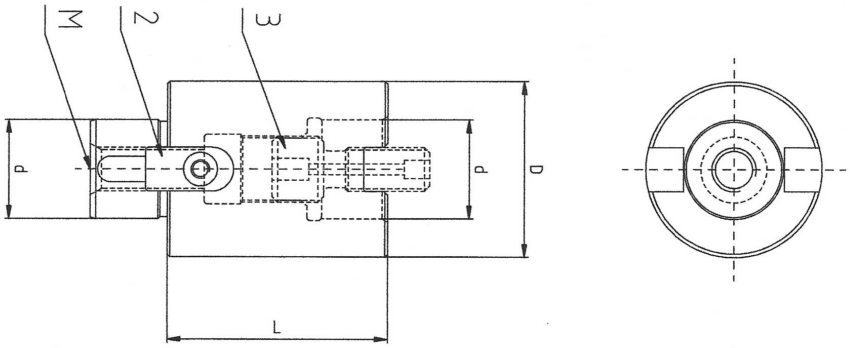

Model A

Article n°	L	d	D	Thread M	3	2
EB.1616.060	60	16	32	M8	VPM - 8	K - 8
EB.2222.060	60	22	40	M10	VPM - 10	K - 10
EB.2727.060	60	27	48	M12	VPM - 12	K - 12
EB.3232.070	70	32	58	M16	VPM - 16	K - 14
EB.4040.070	70	40	70	M20	VPM - 20	K - 16
EB.2222.100	100	22	40	M10	VPM - 10	K - 10
EB.2727.100	100	27	48	M10	VPM - 10	K - 12
EB.3232.120	120	32	58	M16	VPM - 16	K - 14
EB.4040.120	120	40	70	M20	VPM - 20	K - 16

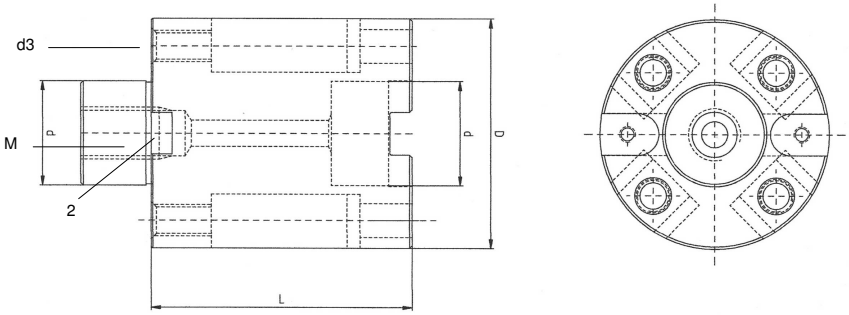

Model B

Article n°	L	d	D	d3	Thread M	Screw [4x]	2 [2x]
EB.88.100	100	40	88.8	66.7	M20	KM12x40	K - 16RB
EB.128.120	120	60	128.5	101.6	M24	KM16x60	K - 25RB

Reduction types

RB model A & B

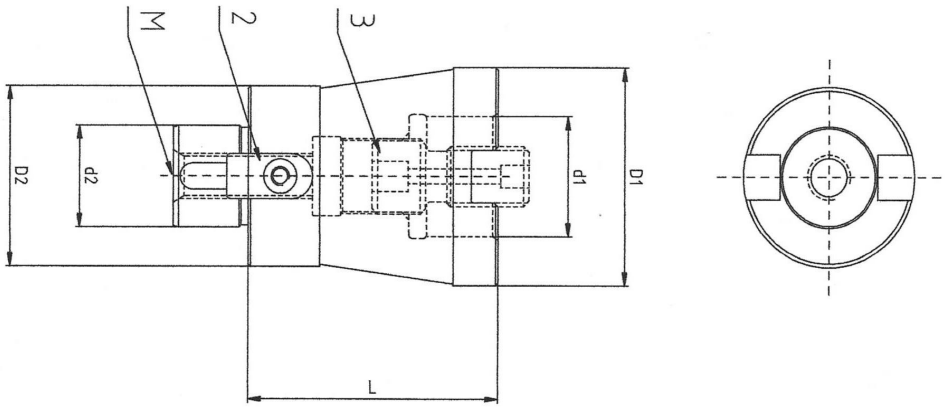

Model A

Article n°	L	d2	d1	D2	D1	Thread M	3	2
RB.2216.070	70	16	22	32	40	M8	VPM - 10	K - 8
RB.2722.100	100	16	27	32	48	M8	VPM - 12	K - 8
RB.2722.070	70	22	27	40	48	M10	VPM - 12	K - 10
RB.3222.100	100	22	32	40	58	M10	VPM - 16	K - 10
RB.3227.070	70	27	32	48	58	M12	VPM - 16	K - 12
RB.4027.100	100	27	40	48	70	M12	VPM - 20	K - 12

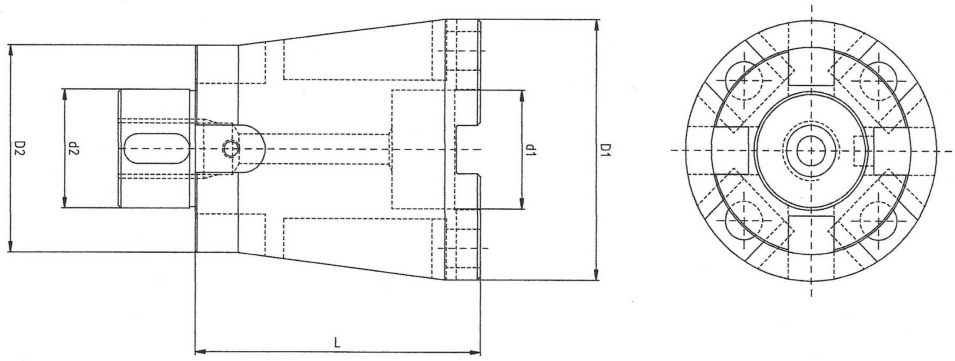

Model B

Article n°	L	d2	d1	D2	D1	Thread M	3	2
RB.4032.070	70	32	40	58	70	M16	VPM - 20	K - 14
RB.4032.100	100	32	40	58	70	M16	VPM - 20	K - 14

Roughing / semi - finishing boring head

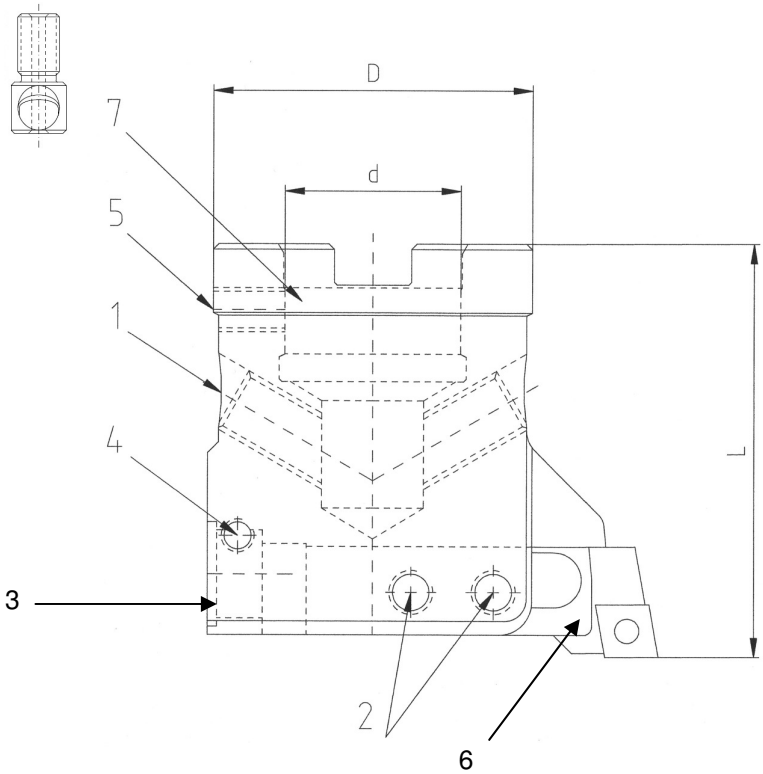

Article n°	Adj. Range	L	d	D	Toolholder [6]	1	2	Adj. 3	Pin 4	5	Pull stud 7
1TP 050	50 - 65	65	22	40	1LC050…	M10	M6	AS.650	S5.66	M8	VM-10
1TP 065	65 - 90	70	27	48	1LC065…/1LT065…	M10	M8	AS.655	S5.66	M8	VM-12
1TP 090	90 - 130	75	32	58	1LC090…/1LT090…	M12	M8	AS.690	S5.66	M8	VM-16
1TP 130	130 - 200	90	40	70	1LC130…/1LT130…	M12	M12	AS.813	S5.66	M8	VM-20
1TP 200	200 - 300	90	40	70	1LC200…/1LT200…	M12	M12	AS.820	S5.66	M8	VM-20
					1LC300…/1LT300…						

Toolholders 1LC and 1LT

Article n°	b	f	l	Insert	Insert screw	Key
1LC05090	16	20	32	CC..09T3..	191.848	170.025
1LC06590	16	20	44	CC..09T3..	191.848	170.025
1LC09090	16	20	64	CC..09T3..	191.848	170.025
1LC13090	25	32	98	CC..1204..	192.446	170.056
1LC20090	25	32	132	CC..1204..	192.446	170.056
1LC30090	25	32	149	CC..1204..	192.446	170.056

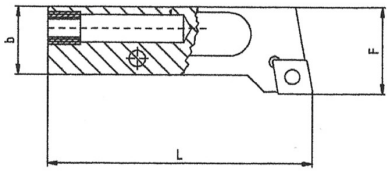

1LC05075	16	20	32	CC..09T3..	191.848	170.025
1LC06575	16	20	44	CC..09T3..	191.848	170.025
1LC09075	16	20	64	CC..09T3..	191.848	170.025
1LC13075	25	32	98	CC..1204..	192.446	170.056
1LC20075	25	32	132	CC..1204..	192.446	170.056
1LC30075	25	32	149	CC..1204..	192.446	170.056

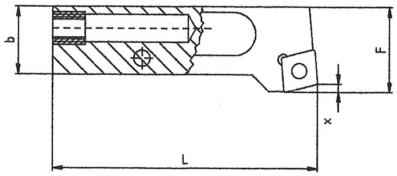

Article n°	b	f	l	Insert	Insert screw	Pin
1LT06590	16	20	44	1.21103L...	121.606	112.250
1LT09090	16	20	64	1.21103L...	121.606	112.250
1LT13090	25	32	98	1.21503L...	121.612	118.214
1LT20090	25	32	132	1.21503L...	121.612	118.214
1LT30090	25	32	149	1.21503L...	121.612	118.214

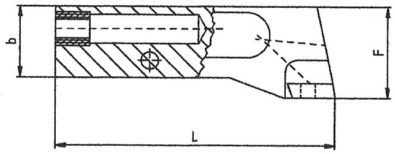

1LT06575	16	20	44	1.21103L...	121.606	112.250
1LT09075	16	20	64	1.21103L...	121.606	112.250
1LT13075	25	32	98	1.21503L...	121.616	118.214
1LT20075	25	32	132	1.21503L...	121.616	118.214
1LT30075	25	32	149	1.21503L...	121.616	118.214

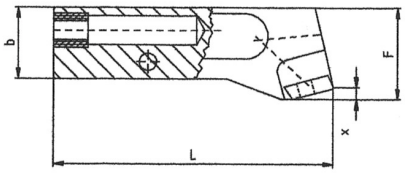

Roughing boring head

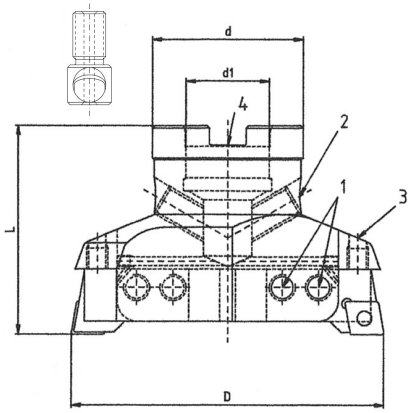

Article n°	Adj. Range	L	d1	d	Toolholder	1	2	3	Pull stud 4
2TP 035	35 - 45	58	16	32	2L.035..	M6	M8	-	VM-8
2TP 045	45 - 58	58	16	32	2L.045..	M6	M8	-	VM-8
2TP 058	58 - 70	66	22	40	2L.058..	M8	M10	M6	VM-10
2TP 070	70 - 90	66	27	48	2L.070..	M8	M10	M8	VM-12
2TP 090	90 - 120	70	32	58	2L.090..	M8	M12	M8	VM-16
2TP 120	120 - 180	75	32	58	2L.120..	M10	M12	M10	VM-16

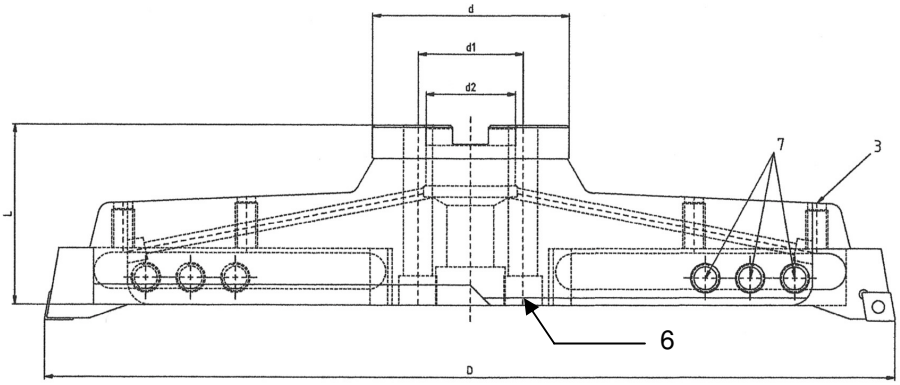

Article n°	Adj. Range	d	d2	d1	L	Toolholder	3	6	7
2TP 175	175 - 260	88	40	66.7	85	2L.175..	M10	KM12.60	M10
2TP 260	260 - 380	88	40	66.7	87	2L.260..	M10	KM12.60	M12
2TP 380	380 - 500	88	40	66.7	87	2L.260..	M10	KM12.60	M12
2TP 450	450 - 570	88	40	66.7	80	2L.260..	M10	KM12.60	M12
2TP 500	500 - 620	88	40	66.7	80	2L.260..	M10	KM12.60	M12

Toolholders 2LC and 2LT

Article n°	b	f	L	Insert	Insert screw	Key
2LC03575	12	16	20.5	CC..0602..	192.432	170.052
2LC04575	12	16	26	CC..09T3..	191.698	170.025
2LC05875	12	16	32	CC..09T3..	191.698	170.025
2LC07075	16	20	39.5	CC..09T3..	191.698	170.025
2LC09075	16	20	52	CC..09T3..	191.698	170.025
2LC12075	20	25	74.5	CC..1204..	192.446	170.056
2LC17575	20	25	104	CC..1204..	192.446	170.056
2LC26075	25	32	153	CC..1204..	192.446	170.056

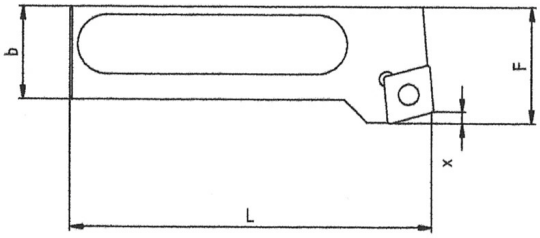

2LC03590	12	16	20.5	CC..0602..	192.432	170.052
2LC04590	12	16	26	CC..09T3..	191.698	170.025
2LC05890	12	16	32	CC..09T3..	191.698	170.025
2LC07090	16	20	39.5	CC..09T3..	191.698	170.025
2LC09090	16	20	52	CC..09T3..	191.698	170.025
2LC12090	20	25	74.5	CC..1204..	192.446	170.056
2LC17590	20	25	104	CC..1204..	192.446	170.056
2LC26090	25	32	153	CC..1204..	192.446	170.056

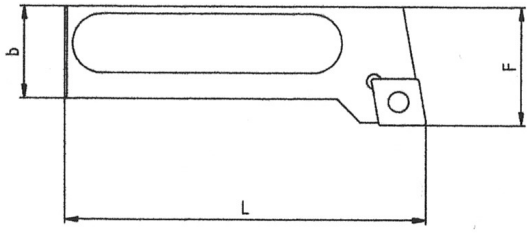

Article n°	b	f	L	Insert	Insert screw	Pin
2LT07075	16	20	39.5	1.21103L..	121.606	112.250
2LT09075	16	20	52	1.21103L..	121.606	112.250
2LT12075	20	25	74.5	1.21103L..	121.606	112.250
2LT17575	20	25	104	1.21103L..	121.606	112.250
2LT26075	25	32	153	1.21503L..	121.616	118.214

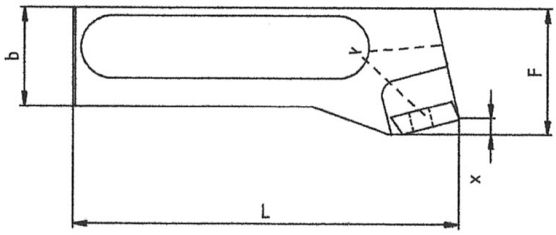

2LT07090	16	20	39.5	1.21103L..	121.606	112.250
2LT09090	16	20	52	1.21103L..	121.606	112.250
2LT12090	20	25	74.5	1.21103L..	121.606	112.250
2LT17590	20	25	104	1.21103L..	121.606	112.250
2LT26090	25	32	153	1.21503L..	121.612	118.214

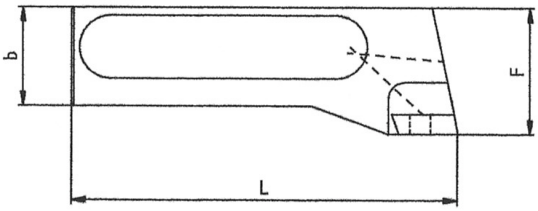

A1FL

Finishing boring head

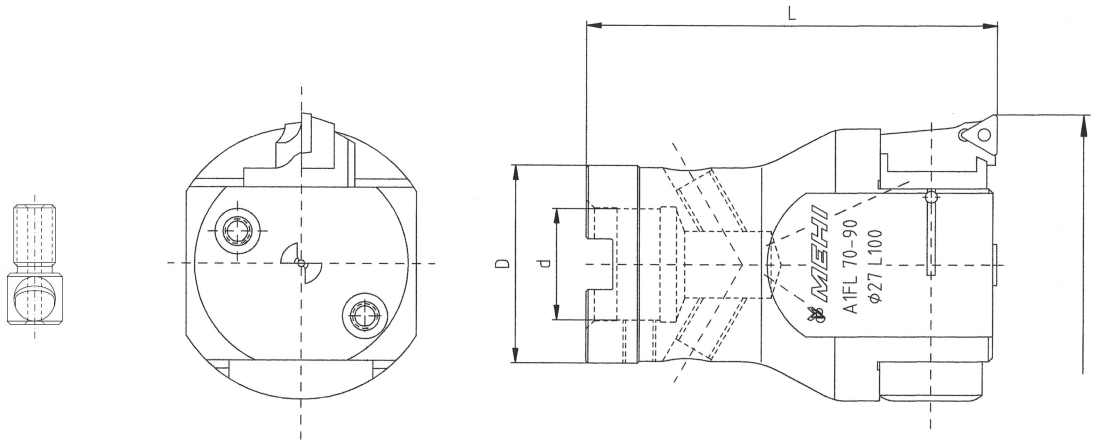

Article n°	Adj. Range	L	d	D	Fine boring unit	Screw	Pull stud
A1FL50	50 - 70	100	22	40	AF5090TC11L / AF5095CC06L	M10	VM-10
A1FL70	70 - 90	100	27	48	AF5090TC11L / AF5095CC06L	M10	VM-12
A1FL90	90 - 110	100	32	58	AF5090TC11L / AF5095CC06L	M12	VM-16
A1FL110	110 - 130	100	32	58	AF5090TC11L / AF5095CC06L	M12	VM-16
A1FL130	130 - 150	100	32	58	AF5090TC11L / AF5095CC06L	M12	VM-16

Boring units

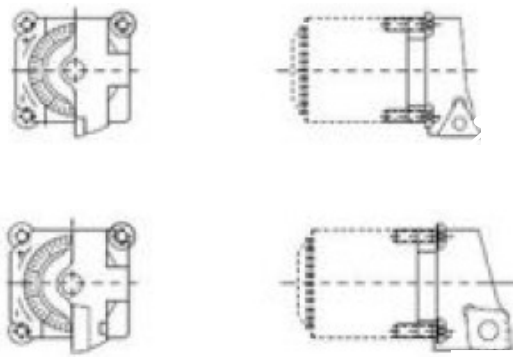

Article n°	D min.	AS	Insert	Insert screw
AF5090TC11	50	90	TCMT1102.. / TCGT1102..	191.371
AF5095CC06L	50	95	CCMT0602.. / CCGT0602..	191.432

Finishing boring head

Article n°	Adj. Range	L	d	D	Adjustment element	Screw	Pull stud
Steel body							
1THF036	35 - 39	80	16	32	VNL10390TC11	M8	VM-8
1THF040	39 - 43	80	16	32	VNL10390TC11	M8	VM-8
1THF043	43 - 50	100	22	40	VNL12390TC11	M10	VM-10
1THF050	50 - 57	100	22	40	VNL12390TC11	M10	VM-10
1THF057	57 - 64	100	22	40	VNL12390TC11	M10	VM-10
1THF064	64 - 71	100	22	40	VNL12390TC11	M10	VM-10
Aluminium body							
1THF056	56 - 70	100	22	40	VNL18390TC16	M10	VM-10
1THF070	70 - 84	100	27	48	VNL18390TC16	M10	VM-12
1THF084	84 - 98	100	27	48	VNL18390TC16	M10	VM-12
1THF098	98 - 128	100	32	58	VNL18390TC16	M10	VM-16
1THF128	128 - 158	100	32	58	VNL18930TC16	M10	VM-16

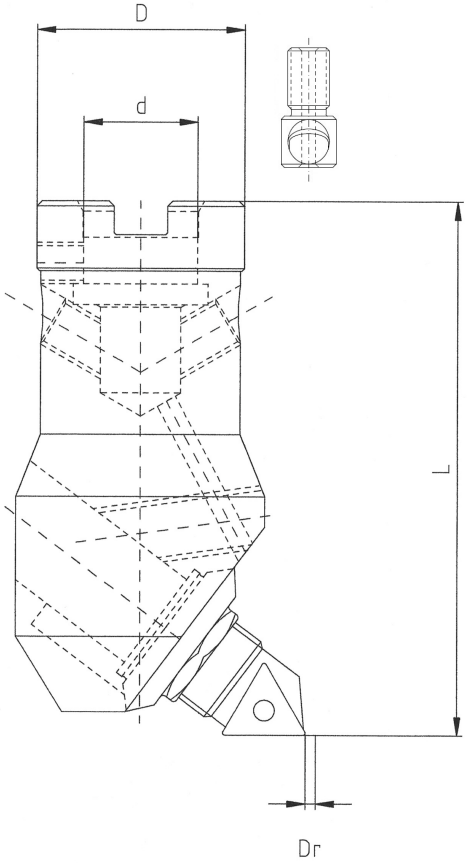

Boring units

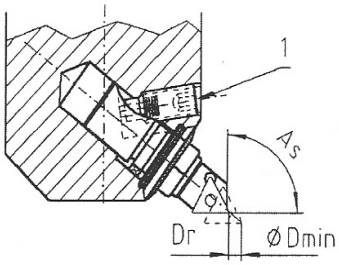

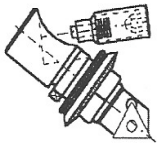

Article n°	Dr min.	AS	Insert	Insert screw	Screw 1
VAL08390TC11	3.5	90	TC..1102..	191.371	M10 x 20J
VNL10390TC11	3.5	90	TC..1102..	191.371	M10 x 20J
VNL12390TC11	3.5	90	TC..1102..	191.371	M10 x 20J
VNL18390TC16	7.2	90	TC..16T3..	191.372	M12 x 20J
VNL18395CC09	7.2	95	CC..09T3..	192.446	M12 x 20J

A2AL Model A

Finishing boring head

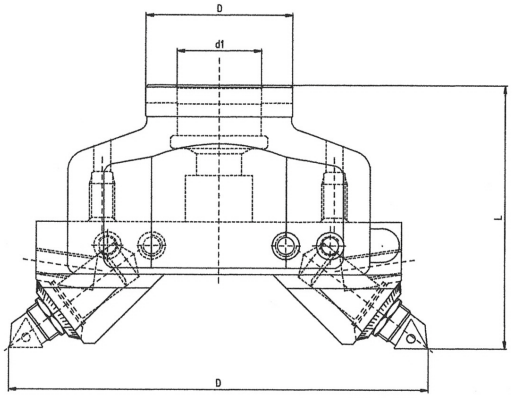

Article n°	Adj. Range	L	d	D	Toolholder	Adjustment unit	Screw
A2AL150 A	150 - 200	125	40	70	1LVA1518	VNL183.9…	1 KPL
A2AL200 A	200 - 300	125	40	88	1LVA2018	VNL183.9…	4 KPL
A2AL300 A	300 - 400	125	40	88	1LVA2318	VNL183.9…	4 KPL
A2AL400 A	400 - 500	125	40	88	1LVA2318	VNL183.9…	4 KPL
A2AL500 A	500 - 600	125	60	128	1LVA2318	VNL183.9…	4 KPL
A2AL600 A	600 - 700	125	60	128	1LVA2318	VNL183.9…	4 KPL
A2AL700 A	700 - 800	125	60	128	1LVA2318	VNL183.9…	4 KPL
`	800 - 1000						

Toolholders

Article n°	b	L1	L	Adjustment unit
1LVA1518	25	60	75	VNL183.9…
1LVA2018	25	60	96	VNL183.9…
1LVA2318	25	60	135	VNL183.9…

Adjustment units

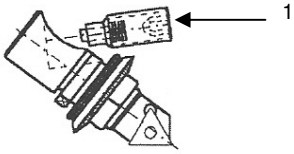

Article n°	Dr min.	AS	Insert	Insert screw / wedge	Screw 1
VNL18390TC16	7.2	90	TC..16T3..	191.372	M12 x 20J
VNL18395CC09	7.2	95	CC..09T3..	192.446	M12 x 20J
VNL18390TP16M	7.2	90	TPGN1603..	TP16M / 191.726	M12 x 20J

A2AL Model B

Finishing boring head

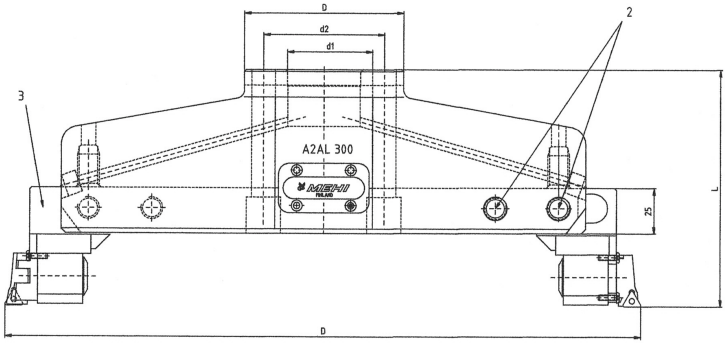

Article n°	Adj. Range	L	d	D	Toolholder	Adjustment unit	Screw
A2AL150 B	150 - 200	130	40	70	F0750	AF5090TC11L / AF5095CC06L	M20
A2AL200 B	200 - 300	130	40	88	F0950	AF5090TC11L / AF5095CC06L	M12
A2AL300 B	300 - 400	130	40	88	F1350	AF5090TC11L / AF5095CC06L	M12
A2AL400 B	400 - 500	130	40	88	F1350	AF5090TC11L / AF5095CC06L	M12
A2AL500 B	500 - 600	130	60	128	F1350	AF5090TC11L / AF5095CC06L	M16
A2AL600 B	600 - 700	130	60	128	F1350	AF5090TC11L / AF5095CC06L	M16
A2AL700 B	700 - 800	130	60	128	F1350	AF5090TC11L / AF5095CC06L	M16
	800 - 1000						

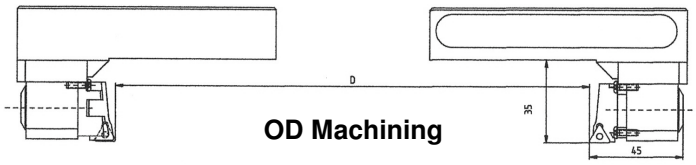

OD Machining

Article n°	Adj. Range	L	d	D	Toolholder	Adjustment unit
A2AL150 B	34 - 84	130	40	70	F0750	AF5095CC06R
A2AL200 B	84 - 184	130	40	88	F0950	AF5095CC06R
A2AL300 B	184 - 284	130	40	88	F1350	AF5095CC06R
A2AL400 B	284 - 384	130	40	88	F1350	AF5095CC06R
A2AL500 B	384 - 484	130	60	128	F1350	AF5095CC06R
A2AL600 B	484 - 584	130	60	128	F1350	AF5095CC06R
A2AL700 B	584 - 684	130	60	128	F1350	AF5095CC06R

Toolholders

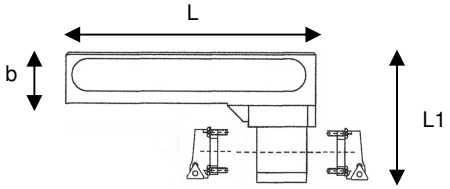

Article n°	b	L1	L	Adjustment unit
F0750	25	65	72	AF50.9…L/R
F0950	25	65	95	AF50.9…L/R
F1350	25	65	136	AF50.9…L/R

Adjustment units

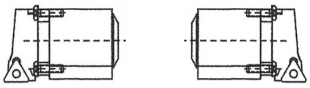

Article n°	AS	Insert	Insert screw
AF5090TC11L	90	TC..1102..	191.371
AF5090TC11R	90	TC..1102..	191.371
AF5095CC06L	95	CC..0602..	192.432

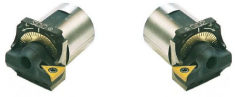

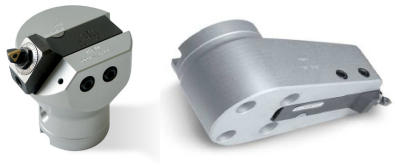

1 TAF model A

Finishing boring head

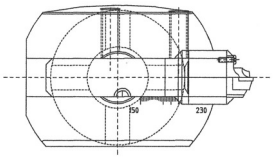

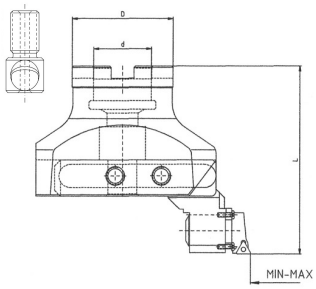

Article n°	Adj. Range	L	d	D	Toolholder	Adjustment unit	Pull stud
1TAF070 A	70 - 100	100	27	48	1LVA070	VNL123.90.TC11	VM-12
1TAF100 A	100 - 150	100	32	58	1LVA100	VNL123.90.TC11	VM-16

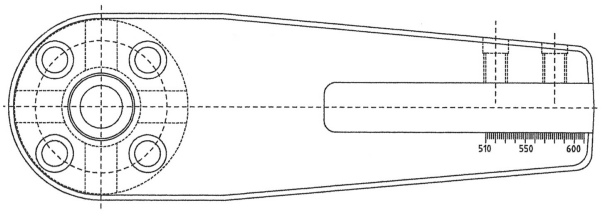

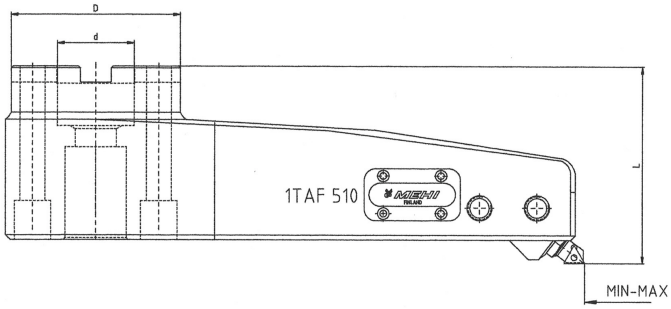

Article n°	Adj. Range	L	d	D	Toolholder	Adjustment unit
1TAF150 A	150 - 240	100	40	70	1LVA230	VNL123.90.TC11
1TAF230 A	230 - 330	100	40	88	1LVA230 / 2318	VNL123.90.TC11 / VNL123.90.TC16
1TAF310 A	310 - 420	100	40	88	1LVA230 / 2318	VNL123.90.TC11 / VNL123.90.TC16
1TAF410 A	410 - 520	100	40	88	1LVA230 / 2318	VNL123.90.TC11 / VNL123.90.TC16
1TAF510 A	510 - 600	100	40	88	1LVA230 / 2318	VNL123.90.TC11 / VNL123.90.TC16
	600 - 1120					

Toolholders

Article n°	b	L1	L	Adjustment unit
1LVA070	25	60	50	VNL123.9…
1LVA100	25	60	90	VNL123.9…
1LVA230	25	60	125	VNL123.9…
1LVA2318	25	60	135	VNL183.9…

Adjustment units

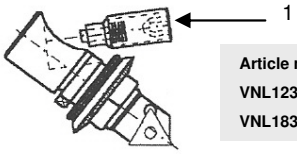

Article n°	Dr min.	AS	Insert	Insert screw	Screw 1
VNL123.90TC11	3.5	90	TC..1102..	191.371	M10 x 20J
VNL183.90TC16	7.2	90	TC..16T3..	191.372	M10 x 20J

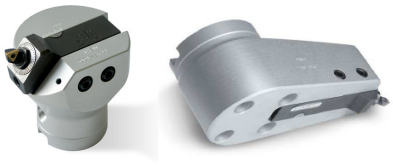

1 TAF model B

Finishing boring head

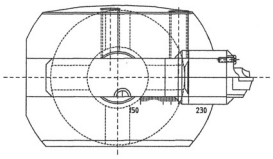

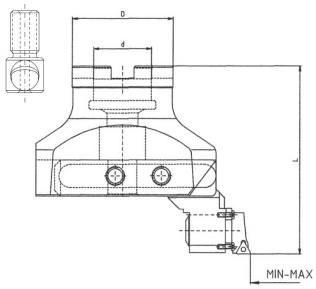

Article n°	Adj. Range	L	d	D	Toolholder	Adjustment unit	Pull stud
1TAF070 B	70 - 100	100	27	48	F0750	AF50.9…	VM-12
1TAF100 B	100 - 150	100	32	58	F0950	AF50.9…	VM-16

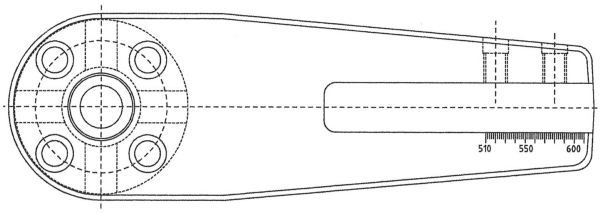

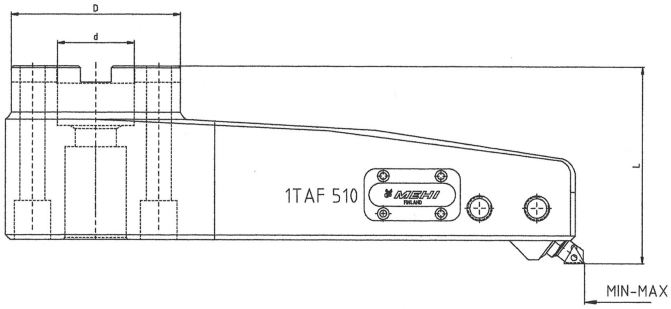

Article n°	Adj. Range	L	d	D	Toolholder	Adjustment unit
1TAF150 B	150 - 240	100	40	70	F1350	AF50.9…
1TAF230 B	230 - 330	100	40	88	F1350	AF50.9…
1TAF310 B	310 - 420	100	40	88	F1350	AF50.9…
1TAF410 B	410 - 520	100	40	88	F1350	AF50.9…
1TAF510 B	510 - 600	100	40	88	F1350	AF50.9…
	600 - 1120					

Toolholders

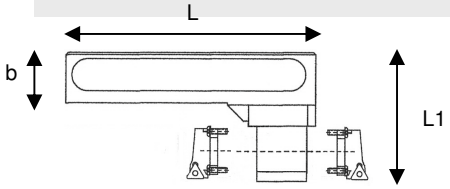

Article n°	b	L1	L	Adjustment unit
F0750	25	65	72	AF50.9…L/R
F0950	25	65	95	AF50.9…L/R
F1350	25	65	136	AF50.9…L/R

Adjustment units

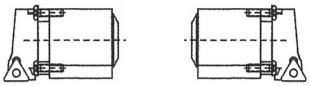

Article n°	AS	Insert	Insert screw/wedge
AF5090TC11L	90	TCMT1102..	191.371
AF5090TC11R	90	TCMT1102..	191.371
AF5095CC06L	95	CCMT0602..	192.432
AF5095CC06R	95	CCMT0602..	192.432
AF5095CC09L	95	CCMT09T3..	192.446
AF5095CC09R	95	CCMT09T3..	192.446
AF50RC0803..	-	RCMT0803..	191.924
AF50RC10T3MO..	-	RCMT10T3..	191.924
AF50TP1103L	90	TPGN1103..	551.113

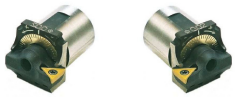

AF20 and AF25

Adjustment units for tailor made tooling

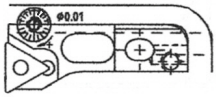

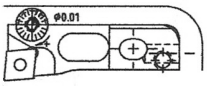

Article n°	Dmin.	AS	L	l1	Dr	Insert	Inset screw	Adjustment pin 2	Screw 1	Screw 3	Screw 4
AF25TC11	25	≈90	38	0.5	0.3	TC..1102..	192.432 M2.5x5.9	AF25 PST	AF25 HSR	DIN 912 M5x16	DIN 914 M4x4
AF20CC06	25	≈90	38	0.5	0.3	CC..0602..	192.432 M2.5x5.9	AF25 PST	AF25 HSR	DIN 912 M5x12	DIN 914 M4x5

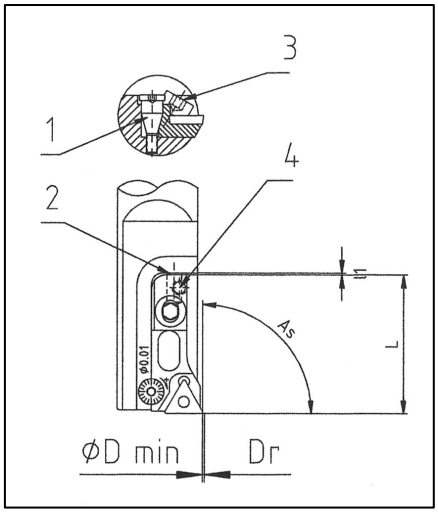

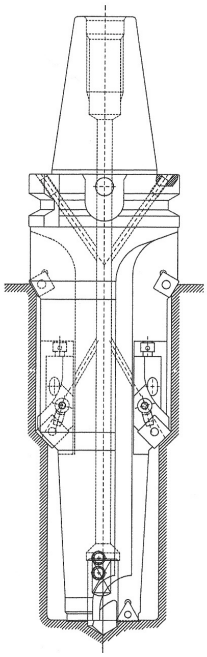

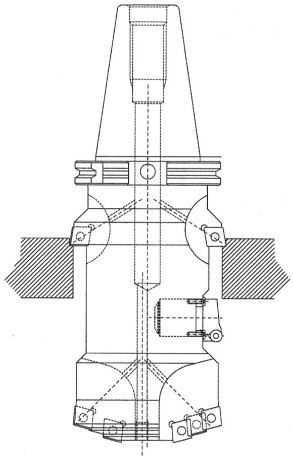

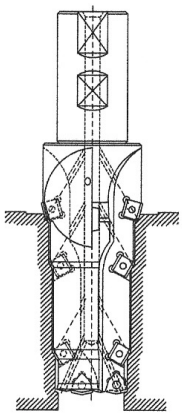

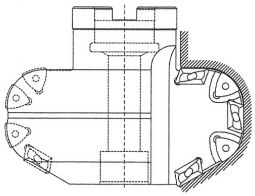

Main insert types

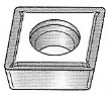

	Ap	fn
CCMT 060202 WF PTT20 / PTT35	0.05 – 0.50	0.04 – 0.10
CCMT 060204 WM PTT20 / PTT35	0.30 – 2.00	0.05 – 0.20
CCMT 060208 WM PTT20 / PTT35	0.60 – 2.50	0.08 – 0.30
CCMT 09T302 WF PTT20 / PTT35	0.05 – 1.50	0.04 – 0.10
CCMT 09T304 WM PTT20 / PTT35	0.30 – 3.00	0.05 – 0.20
CCMT 09T308 WM PTT20 / PTT35	0.60 – 3.00	0.08 – 0.30
CCMT 120404 WM PTT20 / PTT35	0.30 – 3.50	0.05 – 0.20
CCMT 120408 WM PTT20 / PTT35	0.60 – 3.50	0.08 – 0.30
CCGT 060202 ALU KTE20	0.03 – 0.80	0.04 – 0.12
CCGT 060204 ALU KTE20	0.10 – 2.00	0.05 – 0.20
CCGT 09T302 ALU KTE20	0.03 – 1.00	0.04 – 0.12
CCGT 09T304 ALU KTE20	0.10 – 2.00	0.05 – 0.20
CCGT 09T308 ALU KTE20	0.30 – 4.00	0.08 – 0.30
CCGT 120402 ALU KTE20	0.03 – 1.50	0.04 – 0.12
CCGT 120404 ALU KTE20	0.10 – 2.50	0.05 – 0.25
CCGT 120408 ALU KTE20	0.30 – 4.50	0.08 – 0.35

	Ap	fn
TCMT 06T102 KF H13A	0.03 – 0.10	0.03 – 0.06
TCMT 06T104 KF H13A	0.05 – 0.20	0.04 – 0.08
TCMT 06T108 KF H13A	0.10 – 0.30	0.05 – 0.10
TCMT 110202 WF PTT20 / PTT35	0.05 – 0.50	0.04 – 0.10
TCMT 110204 WM PTT20 / PTT35	0.30 – 1.50	0.05 – 0.15
TCMT 110208 WM PTT20 / PTT35	0.60 – 2.00	0.08 – 0.25
TCMT 16T302 WF PTT20 / PTT35	0.05 – 1.50	0.04 – 0.10
TCMT 16T304 WM PTT20 / PTT35	0.30 – 2.50	0.05 – 0.15
TCMT 16T308 WM PTT20 / PTT35	0.60 – 3.00	0.08 – 0.25
TCGT 110202 ALU KTE20	0.03 – 0.50	0.04 – 0.10
TCGT 110204 ALU KTE20	0.10 – 1.50	0.05 – 0.15
TCGT 16T302 ALU KTE20	0.03 – 0.50	0.04 – 0.10
TCGT 16T304 ALU KTE20	0.10 – 1.50	0.05 – 0.15
TCGT 16T308 ALU KTE20	0.30 – 3.00	0.08 – 0.25

Other insert types are available

Other insert types

	Ap	fn
RCMT 0803 WM PTT35	0.1 – 3.20	0.1 – 1.00
RCGT 0803 ALU KTE20	0.1 – 3.20	0.1 – 1.00
RCMT10T3M0 235	0.1 – 4.00	0.1 – 1.25
RCMT10T3M0 AL H10	0.1 – 4.00	0.1 – 1.25

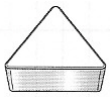

	Ap	fn
TPGN 110304 H13A	0.30 – 1.50	0.05 – 0.15
TPGN 110308 H13A	0.60 – 2.00	0.08 – 0.25
TPGN 160304 H13A	0.30 – 2.50	0.05 – 0.15
TPGN 160308 H13A	0.60 – 3.00	0.08 – 0.25
TPMR 110304 235	0.30 – 1.50	0.05 – 0.15
TPMR 110308 235	0.60 – 2.00	0.08 – 0.25
TPMR 160304 235	0.30 – 2.50	0,05 – 0.15
TPMR 160308 235	0.60 – 2.00	0.08 – 0.25

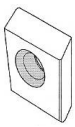

	Ap	fn
1.21103L…	0.50 – 4.00	0.08 – 0.25
1.21503L…	0.50 – 6.00	0.10 – 0.35

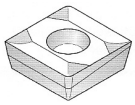

	Ap	fn
SPGX 060202 R20 KC7215	0.10 – 4.00	0.05 – 0.10
SPGX 060206 R20 KC7215	0.10 – 4.00	0.05 – 0.10
SPGX 060208 R20 KC7215	0.10 – 4.00	0.10 – 0.20
SPGX 090308 R20 KC7215	0.10 – 6.75	0.10 – 0.20
SPGX 090312 R20 KC7215	0.10 – 6.75	0.10 – 0.25
SPGX 090316 R20 KC7215	0.10 – 6.75	0.10 – 0.30
SPGX 120408 R20 KC7215	0.10 – 9.00	0.10 – 0.20
SPGX 120410 R20 KC7215	0.10 – 9.00	0.10 – 0.20
SPGX 120416 R20 KC7215	0.10 – 9.00	0.10 – 0.30
SPGX 120420 R20 KC7215	0.10 – 9.00	0.10 – 0.40
SPGX 150508 R20 KC7215	0.10 – 11.25	0.10 – 0.20
SPGX 150512 R20 KC7215	0.10 – 11.25	0.10 – 0.25
SPGX 150516 R20 KC7215	0.10 – 11.25	0.10 – 0.30
SPGX 150520 R20 KC7215	0.10 – 11.25	0.10 – 0.40

Other insert types and grades are available

Insert radius and obtainable surface roughness

$$Rt = \frac{125 \times f^2}{r} \text{ in } \mu m$$

Conversion table:

Rt	100	63	30	20	10	6.3	4.0	2.5	1.2
Ra	25	16	6.3	4.0	1.6	1.0	0.63	0.4	0.2

Calculated Rt values [≈ Ra]:

Nose radius	0.2	0.4	0.8
Feed rate			
0.05	1.56 [0.26]	0.78 [0.13]	0.39 [0.065]
0.1	6.25 [1.0]	3.125 [0.5]	1.563 [0.25]
0.2	25 [5.0]	12.5 [2.5]	6.25 [1.25]
0.3	56 [14.0]	28 [7.5]	14 [3.75]

Real values through all cutting influences:

Nose radius	0.2	0.4	0.8
Feed rate			
0.05	3.125 [0.5]	1.56 [0.26]	0.78 [0.13]
0.1	12.5 [2.5]	6.25 [1.0]	3.125 [0.5]
0.2	50 [11.0]	25 [5.0]	12.5 [2.5]
0.3	112 [28.0]	56 [14.0]	28 [7.5]

Common cutting speeds Vc for carbide and cermet inserts

P

Carbon steels	Examples [DIN/W.Nr]	Cutting speeds [Vc]
< 450 N/mm²	C15 C22 Ck15 St37-3 9SMn28	180 - 350 m/min
< 850 N/mm²	St50-2 16CrMo4 12CrMo19 5	150 - 250 m/min
< 1100 N/mm²	St60-2 St70-2 42CrV6 51CrMoV4	80 - 180 m/min
Low alloy steels		
< 600 N/mm²	100Cr6 42Cr4 51CrV4	140 - 220 m/min
< 1000 N/mm²	31NiCr14 100Cr2 36NiCr6	110 - 180 m/min
< 1300 N/mm²	40CrMn7 35NiCr18 42CrMo4	70 - 140 m/min
High alloy steels		
< 700 N/mm²	X40CrMoV5 X155CrVMo12 1	70 - 140 m/min
< 1200 N/mm²	S-12-1-4-5 S-6-5-2	60 - 120 m/min

M

Stainless steels	Examples [DIN/W.Nr]	Cutting speeds [Vc]
Ferritic/martensitic	1.4021 1.4305 1.4448 1.4762	110 - 180 m/min
Martensitic	1.4034 1.4057 1.4125	90 - 140 m/min
Austenitic	1.4301 1.4311 1.4404 1.4462	110 - 180 m/min

K

Cast iron	Examples [DIN/W.Nr]	Cutting speeds [Vc]
Grey [<180-HB]	EN-GJL-110 EN-GJL-150	180 - 340 m/min
Grey [<260HB]	EN-GJL-250 EN-GJL-400	160 - 300 m/min
Nodular[<160HB]	EN-GJS-350 EN-GJS-400	140 - 220 m/min
Nodular [<250HB]	EN-GJS-500 EN-GJS-700	80 - 140 m/min
Malleable [<130HB]	EN-GJW-350 EN-GJW-550	140 - 220 m/min
Malleable [<230HB]	EN-GJW-650 EN-GJW-700	110 - 180 m/min

Common cutting speeds Vc for carbide and cermet inserts

N

Non ferritic materials	Examples [DIN/W.Nr]	Cutting speeds [Vc]
Aluminium alloys		
< 250 N/mm²	Al99.5 AlMg1	300 - 450 m/min
< 350 N/mm²	AlCuSiPb G-AlCu5Ni1 AlZnMgCu0.5	350 - 650 m/min
< 250 N/mm²/ < 9% Si	G-AlSi9Mg G-AlSi7Mg	250 - 400 m/min
< 300 N/mm²/ < 12% Si	G-AlSi12 G-AlSi10Mg G-AlCu4TiMg	150 - 200 m/min
< 450 N/mm²/ < 17% Si	G-AlSi17Cu4 G-AlSi21CuNiMg	70 - 120 m/min
Copper alloys		
Pb > 1%	G-CuSn7ZnPb G-CuPb10Sn	140 - 200 m/min
Brass	CuZn15 CuZn30 G-CuPb20Sn	180 - 240 m/min
Electrolytic copper	CuAl10Ni5Fe4 G-CuAl10Ni G-CuSn12	120 - 180 m/min
Plastics		
Duroplastics	Responal Novodur	90 - 120 m/min
Thermoplastics	Bakelit Pertinax	90 - 120 m/min
Fibrous reïnforced	CFK GFK AFK	100 - 150 m/min
Hard rubber	-	120 - 180 m/min

S

Heat resistent alloys	Tensile strength Rm in N/mm²	Cutting speeds [Vc]
Iron based	800 - 1200	20 - 100 m/min
Nickel based	1000 - 1450	30 - 110 m/min
Cobalt based	1000 - 1450	30 - 110 m/min
Titanium alloys	900 - 1600	40 - 140 m/min

H

Hardened materials	Examples [DIN/W.Nr]	Cutting speeds [Vc]
Tool steels [40-48 HRc]	-	80 - 120 m/min
Tool steels [48-52 HRc]	-	45 - 75 m/min
Tool steels [52-60 HRc]	-	35 - 50 m/min
Tool steels [60-68 HRc]	-	20 - 30 m/min
Hardened cast iron	G-X260NiCr4 2 G-X330NiCr4 2 [< 48 HRc]	45 - 65 m/min

Trouble shooting on cutting edges

Picture	Tool failure	Cause	Solution
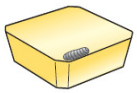	crater wear	too high toughness grade too high cutting speed	use more wear resistant grade decrease cutting speed
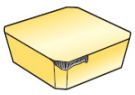	flank wear	too high toughness grade too small relief angle to high cutting speed to low feed rate	use more wear resistant grade choose for larger relief angle decrease cutting speed increase feed rate
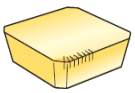	therm. cracks	too wear resistant grade frequent temp. change	use more tougher grade use dry cutting conditions
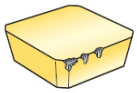	chipping	too wear resistant grade too small edge preperation instability of the tool too high feed rate	use more tougher grade use larger edge preperation increase tool size decrease feed rate
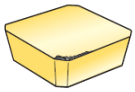	built up edge	improper edge preperation too low rake angle too low cutting speed	use smaller edge preperation increase rake angle increase cutting speed
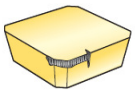	notch wear	too high toughness grade too low rake angle too small edge preperation	use more wear resistant grade increase rake angle use larger edge preperation
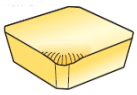	deformation	too high toughness grade excessive cutting temp.	use more wear resistant grade decrease cutting speed
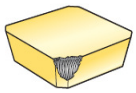	fracture	too wear resistant grade too small edge preperation instability of the tool too high feed rate	use more tougher grade use larger edge preperation increase tool size decrease feed rate

Symbols and formulas

Symbols	Descriptions	Formulas / remarks
Vc	cutting speed in m/min	Vc = [D x π x n] : 1000
π	the letter/value Pi	3.14
D	diameter of cut in mm	-
n	revolutions per min	n = [1000 x Vc] : [D x π]
Vf	feed rate in mm/min	Vf = n x fn or Vf = n x fz x z
z	number of teeth [cutting edges]	-
fn	feed rate per revolution in mm	-
fz	feed rate per tooth in mm	-
hm	chip thickness in mm	h = fz x sinα
α	∠ cutting edge and workpiece in °	-
b	contact length cutting edge	b = Ap : sinα
Ap	depth of cut in mm	D.O.C.
Pc	power consumption in kW	Pc = [Ap x Vf x kc] : [60 x 10^3 x η]
η	spindel output	0.9 [=90%]
Mc	torque in Nm	Mc = [D : 2] x fn x kc : 8000
Lc	length of cut in mm	-
Tc	machining time in seconds	Tc = [Lc : Vf] x 60
Q	metal removel rate in cm^3/min	Q = [Ap x Vf] : 1000
Rt	calculated surface roughness in µm	Rt = [125 x f^2] : r
kc	specific cutting force in N/mm^2	see chart
r	radius of insert in mm	-

Approximate specific cutting force values versus fz

Carbon steels	fz = 0.05	0.1	0.16	0.2	0.25	0.3
< 450 N/mm²	2900	2600	2400	2300	2250	2200
< 850 N/mm²	4350	3600	3200	3000	2850	2700
< 1100 N/mm²	3500	3400	3100	2900	2600	2550
Low alloy steels						
< 600 N/mm²	4500	3400	2800	2600	2500	2400
< 1000 N/mm²	3800	3200	2800	2600	2500	2400
< 1300 N/mm²	5400	4500	4000	3800	3600	3400
High alloy steels						
< 700 N/mm²	4000	3300	2900	2800	2600	2500
< 1200 N/mm²	4000	3300	2900	2800	2600	2500

Stainless steels	fz = 0.05	0.1	0.16	0.2	0.25	0.3
Ferritic/martensit.	4000	3600	3300	2900	2750	2600
Martensitic	4000	3600	3300	2900	2750	2600
Austenitic	4600	4000	3700	3500	3400	3300

Cast iron	fz = 0.05	0.1	0.16	0.2	0.25	0.3
Grey c. iron	2500	2400	1850	1750	1650	1600
Nodular c. iron	2150	1800	1600	1500	1400	1350
Malleable c. iron	3650	3200	2900	2800	2700	2600

Aluminium alloys	fz = 0.05	0.1	0.16	0.2	0.25	0.3
< 250 N/mm²	1550	1300	1200	1100	1050	1000
< 12% Si	1650	1400	1300	1200	1150	1100
Copper alloys						
Pb > 1%	1350	1150	1000	950	900	850
Electrolitic Cu	1750	1500	1350	1300	1200	1150

Heat resistant all.	fz = 0.05	0.1	0.16	0.2	0.25	0.3
Iron based	4600	4100	4000	3800	3400	3200
Nickel based	5000	4100	4000	3800	3100	2900
Cobalt based	5000	4100	4000	3800	3200	2900
Titanium alloys	2600	2200	2100	2000	1800	1700

Aluminium alloys	fz = 0.05	0.1	0.16	0.2	0.25	0.3
48 – 52 HRc	5500	4750	4300	4100	4000	3800
52 – 60 HRc	6400	5550	5050	4800	4600	4450
60 – 68 HRc	7300	6350	5800	5500	5300	5100

Machining example 1

Workpiece:	Valve housing
Material:	Duplex stainless steel / 1.4462
Operation:	Boring hole to Ø 70 mm IT8 x 160 mm depth
Machining center:	Vertical
Adapter:	SK40 MAS-BT/JIS to DIN 6357
	G442 40 x 27 x 100
Coolant:	8 % Emulsion; 20 bar presure; external
Boring head:	2 TP 070
Toolholders:	2 LC 07090 [2x]
Inserts:	CCMT 09T308 WM PTT35

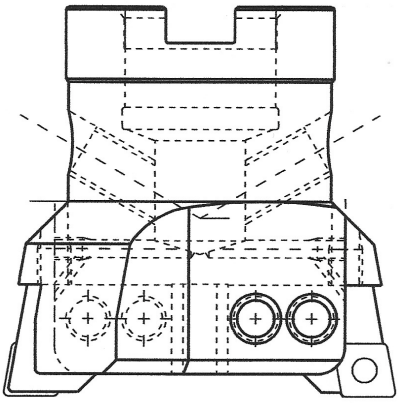

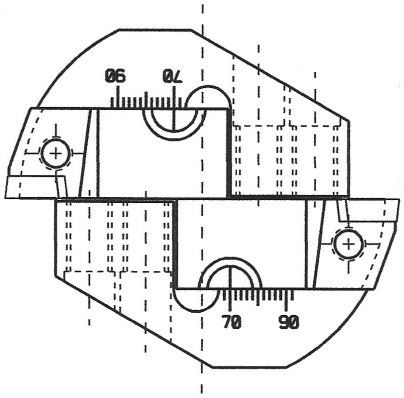

Cutting speed Vc:	100 m/min
Number of rotations n:	454 r.p.m.
Depth of cut Ap / D.O.C.:	3.0 mm
Feed per tooth fz:	0.2 mm [z=2]
Feed rate Vf:	181 mm/min [z=2]
Metal removal rate Q:	0.543 cm^3/min
Surface roughness Ra:	≈ 2.2 µm [measured]
Specific cutting force kc:	≈ 2400 N/mm^2
Power consumption Pc:	≈ 24.2 kW
Torque Mc:	≈ 4.2 Nm

Machining example 2

Workpiece:	Bearing nest
Material:	Low alloy steel / 42CrMo4
Operation:	Fine finishing hole to Ø 30K6 mm IT6 x 18 mm depth
Machining center:	Vertical
Adapter:	SK40 DIN 69871 to DIN 1835 B
	G320 40 x 25 x 100
Coolant:	8 % Emulsion; 20 bar presure; internal
Finishing boring bar:	TVA 28 25
Boring unit:	VAL 083 90 TC 06
Inserts:	TCMT 06T102 KF H13A
Cutting speed Vc:	160 m/min
Number of rotations n:	1698 r.p.m.
Depth of cut Ap / D.O.C.:	0.2 mm
Feed rate fn:	0.05 mm
Feed rate Vf:	85 mm/min
Surface roughness Ra:	0.5 µm [measured]

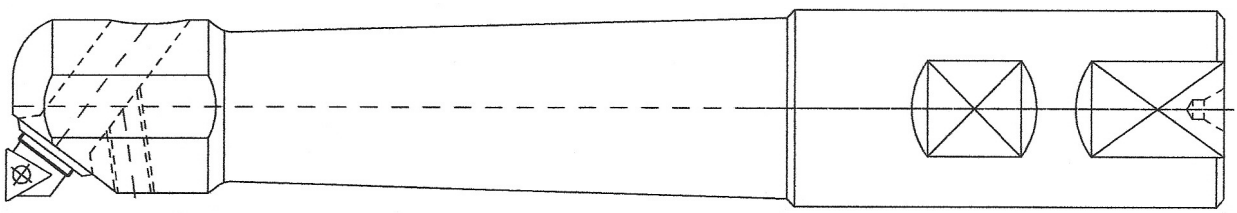

Machining example 3

Workpiece:	Engine block
Material:	Nodular cast iron / EN GJS 400
Operation:	Roughing hole to Ø 495 mm 800 mm depth
Machining center:	Bridge type with ram square 280 mm
Adapter:	SK50 DIN 69871 to DIN 6357 B
	G342 50 x 40 x 55
Coolant:	8 % Emulsion; 40 bar presure; external
Boring head:	2TP 380
Toolholders:	Special 2LC26075 type for SNGX
Inserts:	SNGX 120712 CKS4

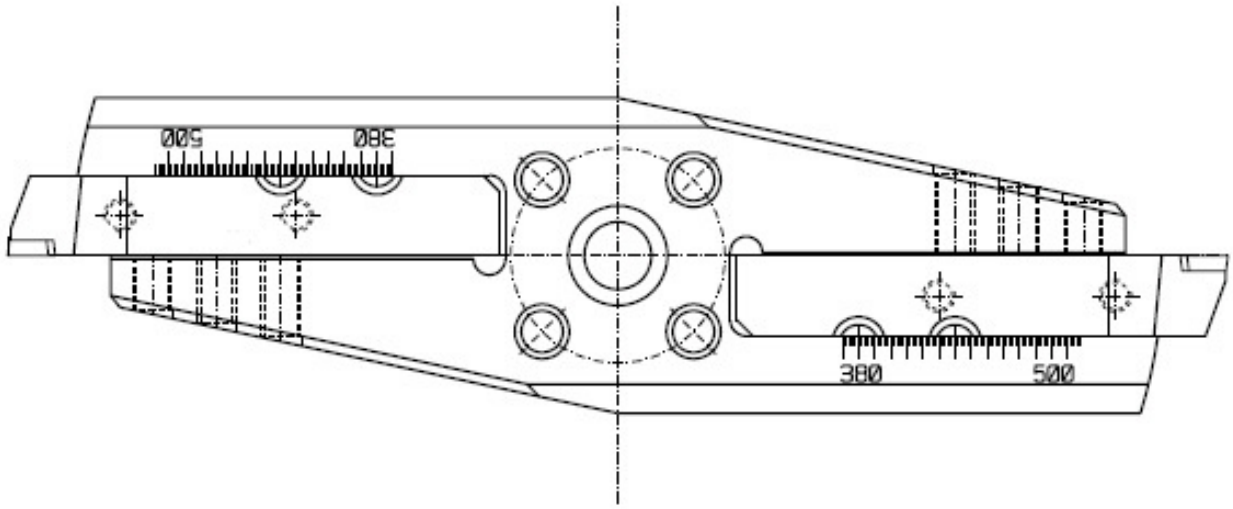

Cutting speed Vc:	400 m/min
Number of rotations n:	257 r.p.m.
Depth of cut Ap / D.O.C.:	4.0 mm
Feed rate fz:	0.35 mm [z=2]
Feed rate Vf:	180 mm/min [z=2]
Specific cutting force kc:	1300 N/mm²
Power consumption Pc:	17.3 kW
Torque Md:	28.2 Nm

Regular tolerances

	O.D. in µm					
Tolerances	3 - 6	6 - 10	10 – 18	18 – 30	30 – 50	50 - 80
e8	- 20 / - 38	- 25 / - 47	- 32 / - 59	- 40 / - 73	- 50 / - 89	- 60 / - 106
h6	0 / - 8	0 / - 9	0 / - 11	0 / - 13	0 / - 16	0 / - 19
h7	0 / - 12	0 / - 15	0 / - 18	0 / - 21	0 / - 25	0 / - 30
h8	0 / - 18	0 / - 22	0 / - 27	0 / - 33	0 / - 39	0 / - 46
h9	0 / - 30	0 / - 36	0 / - 43	0 / - 52	0 / - 62	0 / - 74
h10	0 / - 48	0 / - 58	0 / - 70	0 / - 84	0 / - 100	0 / - 120
h11	0 / - 75	0 / - 90	0 / - 110	0 / - 130	0 / - 160	0 / - 190
k8	+ 18 / 0	+ 22 / 0	+ 27 / 0	+ 33 / 0	+ 39 / 0	+ 46 / 0
k9	+ 30 / 0	+ 36 / 0	+ 43 / 0	+ 52 / 0	+ 62 / 0	+ 74 / 0
k10	+ 48 / 0	+ 58 / 0	+ 70 / 0	+ 84 / 0	+ 100 / 0	+ 120 / 0

	I.D. in µm					
Tolerances	3 - 6	6 - 10	10 – 18	18 – 30	30 – 50	50 - 80
P9	- 12 / - 40	- 15 / - 51	- 18 / - 61	- 22 / - 74	- 26 / - 88	- 32 / - 106
H6	+ 8 / 0	+ 9 / 0	+ 11 / 0	+ 13 / 0	+ 16 / 0	+ 19 / 0
H7	+ 12 / 0	+ 15 / 0	+ 18 / 0	+ 21 / 0	+ 25 / 0	+ 30 / 0
H8	+ 18 / 0	+ 22 / 0	+ 27 / 0	+ 33 / 0	+ 39 / 0	+ 46 / 0
H9	+ 30 / 0	+ 36 / 0	+ 43 / 0	+ 52 / 0	+ 62 / 0	+ 74 / 0
H10	+ 48 / 0	+ 58 / 0	+ 70 / 0	+ 84 / 0	+ 100 / 0	+ 120 / 0
H11	+ 75 / 0	+ 90 / 0	+ 110 / 0	+ 130 / 0	+ 160 / 0	+ 190 / 0
H12	+ 120 / 0	+ 150 / 0	+ 180 / 0	+ 210 / 0	+ 250 / 0	+ 300 / 0
H13	+ 180 / 0	+ 220 / 0	+ 270 / 0	+ 330 / 0	+ 390 / 0	+ 460 / 0

Hardness and tensile strength conversion

Tensile strength	Vickers hardness	Brinell hardness	Rochwell hardness		
Rm in N/mm²	HV 30 [F98 N]	HB	HRc	HRa	HRb
255	80	76.0	-	-	-
285	90	85.5	-	-	48.0
320	100	95.0	-	-	56.2
350	110	105.0	-	-	62.3
450	140	133.0	-	-	75.0
575	180	171.0	-	-	87.1
675	210	199.0	-	-	93.5
800	250	238.0	22.2	61.6	99.5
900	280	266.0	27.1	63.8	104.0
1030	320	304.0	32.2	66.4	-
1155	360	342.0	34.4	67.6	-
1290	400	380.0	40.8	70.8	-
1350	420	399.0	42.7	71.8	-
1420	440	418.0	44.5	72.8	-
1555	480	456.0	47.7	74.5	-
1595	490	466.0	48.4	74.9	-
1665	510	485.0	49.8	74.9	-
1740	530	504.0	51.1	76.4	-
1810	550	523.0	52.3	77.0	-
2030	610	580.0	55.7	78.9	-
2180	650	618.0	57.8	80.0	-
-	720	-	61.0	81.8	-
-	760	-	62.5	82.6	-
-	800	-	64.0	-	-
-	880	-	66.4	-	-
-	920	-	67.5	-	-
-	940	-	68.0	-	-

Max. load 30 [F = 9.81 x 30 x d² HB = 0.95 x HV [calculated]

Waterhuizerweg 50

9753 HS Haren [Gn]

The Netherlands

Mob.: 0031 [0] 6 48 27 77 13

E - mail: info@amwsystems.nl

Internet: www.amwsystems.nl

RABO bank: 12.87.25.850 IBAN nº: NL59 RABO 012 872 58 50 BIC: RABONL2U

ING bank N.V.: 57 38 513 IBAN nº: NL14INGB0005738513 BIC: INGBNL2A

Chamber of commerce.: Groningen 08 15 29 56 VAT nº: NL0613.54.053.B01